FIELD WIRING HOOK-UP CHART

SIGNAL HEAD #	INDICATION	FIELD TERMINAL	FLASH
1 (EBLT)	R	ø6 R	Y
	Y	ø6 Y	
	G	ø6 G	
	~~Y~~	ø1 Y	
	~~G~~	ø1 G	
2 (EB)	R	ø6 R	Y
	Y	ø6 Y	
	G	ø6 G	
3 & 4 (SB)	R	ø4 R	R
	Y	ø4 Y	
	G	ø4 G	
5 (WBLT)	R	ø2 R	Y
	Y	ø2 Y	
	G	ø2 G	
	~~Y~~	ø5 Y	
	~~G~~	ø5 G	
6 (WB)	R	ø2 R	Y
	Y	ø2 Y	
	G	ø2 G	
7 & 8 (NB)	R	ø8 R	R
	Y	ø8 Y	
	G	ø8 G	
N	WALK	G ø2-W	OFF
	DON'T WALK	R ø2-DW	
S	WALK	G ø6-W	OFF
	DON'T WALK	R ø6-DW	
E	WALK	G ø8-W	OFF
	DON'T WALK	R ø8-DW	
W	WALK	G ø4-W	OFF
	DON'T WALK	R ø4-DW	

TIMING CHART

PHASE	ø1	ø2	ø3	ø4	ø5	ø6	ø7	ø8
MOVEMENT	EBLT	WB	NBLT	SB	WBLT	EB	SBLT	NB
MIN INITIAL	7	20	–	10	7	20	–	10
WALK	–	7	–	7	–	7	–	7
PED CLR	–	10	–	11	–	11	–	11
PASS / EXT	3.7	3.7	–	3.7	3.7	3.7	–	3.7
YELLOW	3.0	3.6	–	3.0	3.0	3.6	–	3.0
RED CLR	2.7	1.7	–	2.8	2.7	1.7	–	2.9
MAX GRN 1	15	40	–	20	15	40	–	20
MAX GRN 2	15	40	–	20	15	40	–	20
PED RECALL	OFF	ON	–	OFF	OFF	ON	–	OFF
VEH RECALL	OFF	ON	–	OFF	OFF	ON	–	OFF
MEMORY	OFF	ON	–	OFF	OFF	ON	–	OFF

VIDEO DETECTION ASSIGNMENTS

DETECTOR	CAMERA	PHASE	SIZE	PULSE	PRESENCE	LOOP DELAY DATA	
						DELAY (SEC.)	INHIBIT DELAY DURING GREEN ø
Z1	1	ø1	5'x25'		X	3	ø1
Z2	3	ø2	5.5'x5.5'	X		–	–
Z4A	2	ø4	5'x40'		X	3	ø4
Z4B	2	ø4	5.5'x40'		X	8	ø4
Z5	3	ø5	5'x25'		X	3	ø5
Z6	1	ø6	5.5'x5.5'	X		–	–
Z8A	4	ø8	5'x40'		X	3	ø8
Z8B	4	ø8	5.5'x40'		X	8	ø8

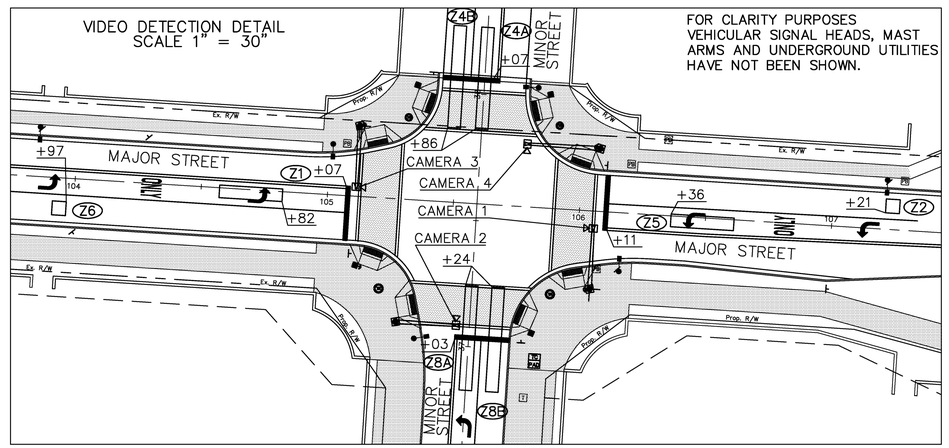

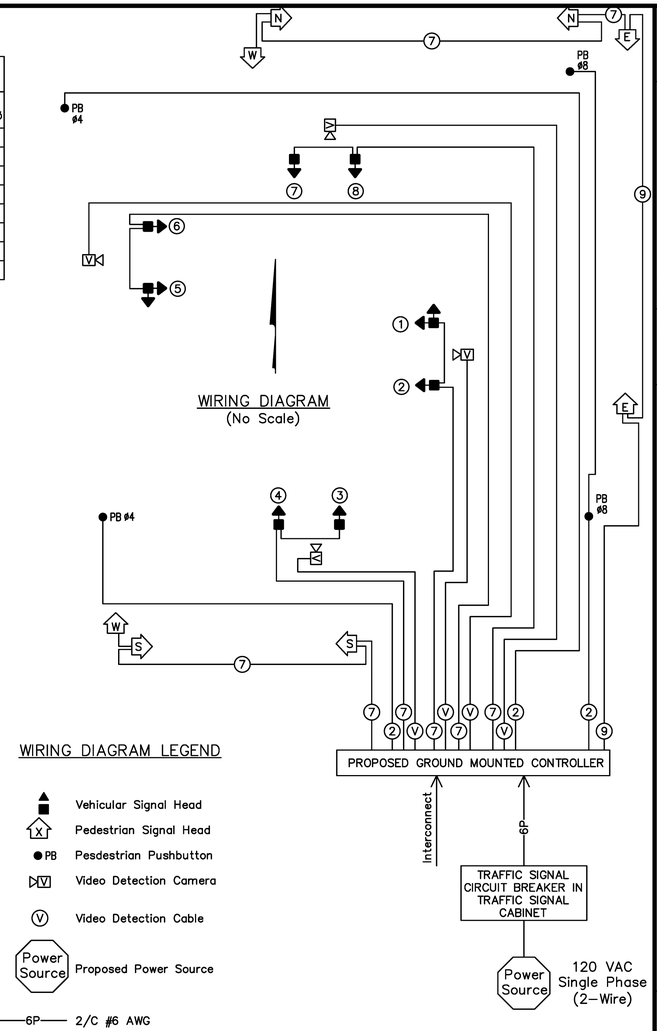

NOTES:

1. SET CONFLICT MONITOR FOR 10 SEC FLASH.
2. LOOP DETECTOR LEAD-IN CABLE SHALL BE USED FOR THE PEDESTRIAN PUSHBUTTONS. GROUND THE SHIELD ONLY AT THE CABINET.
3. BACK PANEL WIRING (FRONT SIDE JUMPERS ONLY)
   A) HARD WIRE "PED RECYCLE" AND "REST-IN-WALK" TO GROUND. HOOK THE [illegible] UTS AS INDICATED. [illegible] 6.
   B) INS[illegible] OUTPUT AND [illegible] OMITTED DURING [illegible]
   C) INS[illegible] OUTPUT AND ø5 [illegible] ITTED DURING THE [illegible]
   D) USE DIODES TO PREVENT FEEDBACK ON MULTI-USE TERMINALS.
4. CONTROLLER SOFTWARE PROGRAMMING
   A) INITIALIZE IN ø2 & ø6 GREEN
   B) ENABLE DUAL ENTRY. ACTIVATE ø4 & ø8
   C) ENABLE SIMULTANEOUS GAP OUT. ACTIVATE ø2, ø4, ø6 & ø8.

SEE CITY OF COLUMBUS, TRAFFIC SIGNAL DESIGN MANUAL, SECTION 2.4 FOR A COMPLETE LIST OF PLAN SHEET NOTES.

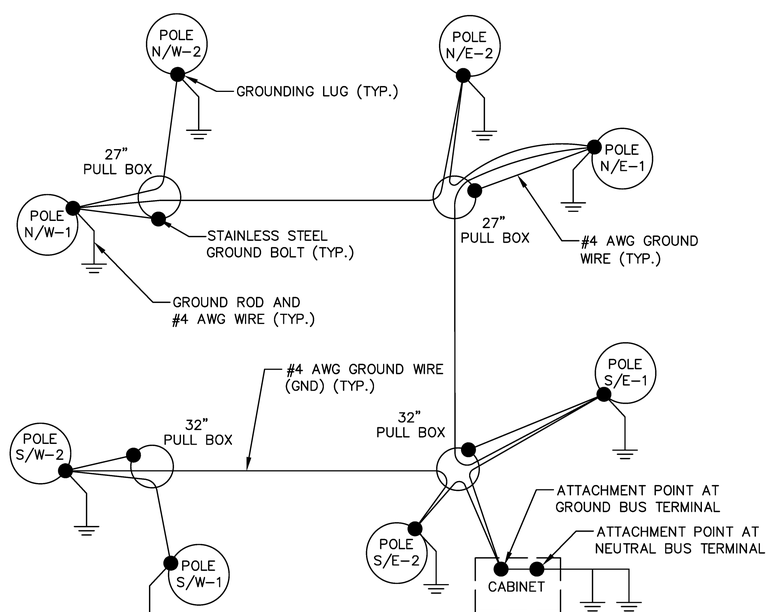

GROUNDING DIAGRAM

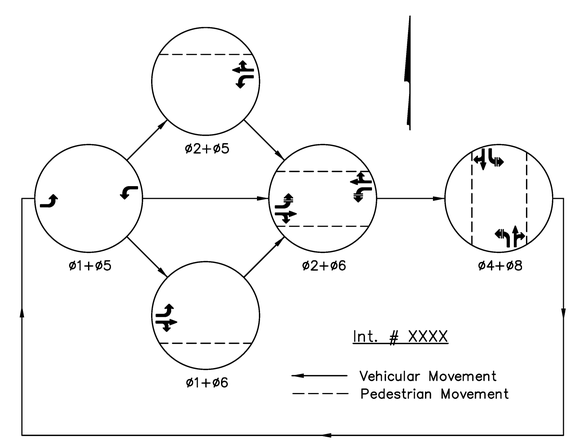

PHASING DIAGRAM

TRAFFIC SIGNAL INSTALLATION PLAN
STREET A AT STREET C

PROJECT TITLE
PHASE OR PROJECT ADDRESS (OR C.I.P. NUMBER)

SCALE None
CALCULATED XXX
CHECKED XXX

XX/XX

XXXX E
REVISED 4/11/14

J:\20121445\Dwg\Chapter 2 - Plan Preparation\SAMPLE PLANS - EPP ONLY\West Arm Example Plan.dwg Last Saved By: dmccann, 4/11/2014 1:41 PM Last Printed By: McCann, Dylan, 4/11/2014 1:42 PM (No Xref(s))