INTERSECTION	SHEET NO.	POLE SIZES & SPAN ATTACHMENT HEIGHT					POLE FABRICATION DATA CLOCKWISE FROM HANDHOLE AT 0 DEGREES						FIELD ORIENTATION			
		POLE DESIGNATION	POLE COLOR	POLE DESIGN NO.	POLE HT. (FT.)	ATTACHMENT HT. (FT.) / SPAN @ HT. (FT.)	ANCHOR BOLT REF. LINE	2" BHC ANGLE–HT. DEG.–FT.	3" BHC ANGLE–HT. DEG.–FT.	PED. SIGNALS	PED. PUSH BUTTON	STREET NAME SIGN	INDEX LINE ANGLE (HANDHOLE)	ANCHOR BOLT REF. LINE	CAPPED FOUNDATION CONDUIT ELL 2" DIA.	FOUNDATION ELEVATION
		S/W–1	Dark Bronze	8	32'	28.5'	90°	–	29' – 180°	–	–	–	225°	135°	225°	726.09
		S/W–2	Dark Bronze	PEDESTAL	10.7'	–	90°	–	–	203°	180°	–	148°	58°	–	726.09
		S/W–3	Dark Bronze	PEDESTAL	10.7'	–	90°	–	–	262°	–	–	198°	108°	–	725.95
STREET A AT STREET B	XXX	N/W–2	Dark Bronze	PEDESTAL	10.7'	–	90°	–	–	99°	–	–	171°	81°	–	726.16
		N/W–1	Dark Bronze	8	30'	27'	90°	28' – 180°	–	223°	251°	135°/225°	134°	44°	134°	725.45
		N/E–2	Dark Bronze	PEDESTAL	10.7'	–	90°	–	–	105°	90°	–	242°	152°	–	728.11
		N/E–1	Dark Bronze	8	32'	28.5'	90°	29' – 180°	–	–	–	–	224°	134°	134°	729.12
		N/E–3	Dark Bronze	PEDESTAL	10.7'	–	90°	–	–	240°	–	–	217°	127°	–	728.66
		S/E–1	Dark Bronze	EXISTING	EX.	26'	EX.	EX.	–	130°/226°	–	135°/225°	135°	EX.	–	728.99
		S/E–2	Dark Bronze	PEDESTAL	5'	–	90°	–	–	–	180°	–	203°	113°	–	727.53

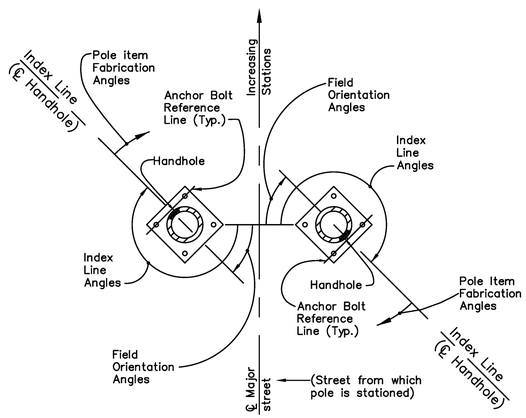

TYPICAL STRAIN POLE ORIENTATION DETAIL
NOT TO SCALE

NOTES:
All angles measured clockwise.
Index line goes through the center of the handhole.

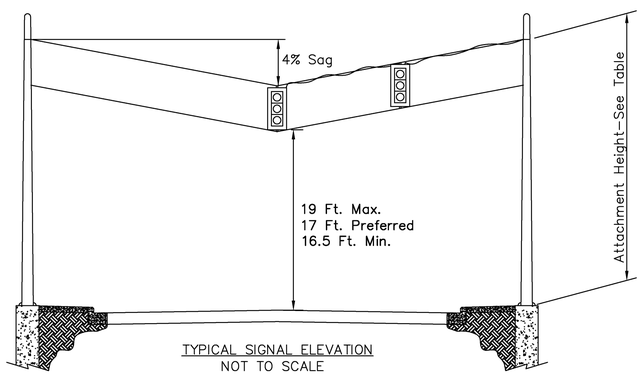

TYPICAL SIGNAL ELEVATION
NOT TO SCALE

NOTES:
1. The lowest signal head height in each direction shall be set at 16.5 feet minimum (17' preferred). Adjust the span accordingly.

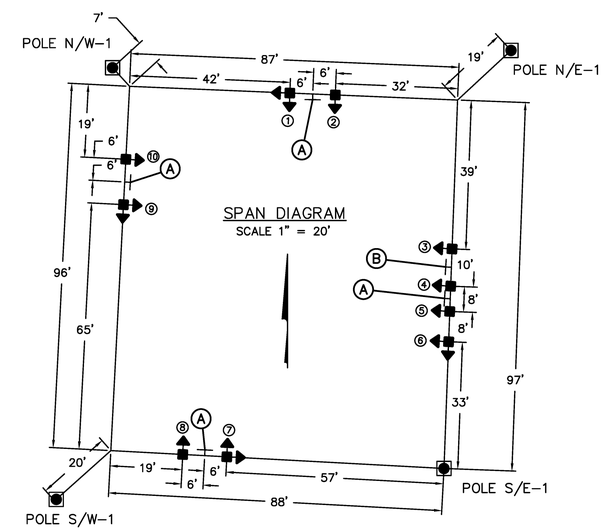

NOTES:

1. The lowest signal head height in each direction shall be set at 16.5 feet (17' Preferred). Adjust the span accordingly.
2. The dimensions shown on the span diagram are estimates. Final head positions shall be on the lane line, channel line or on the lane centerline. The distance between the heads are as indicated.

None

SCALE

CALCULATED XXX | CHECKED XXX

POLE FABRICATION AND ORIENTATION DETAILS

PROJECT TITLE
PHASE OR PROJECT ADDRESS (OR C.I.P. NUMBER)

XX
XX

XXXX E
REVISED 4/11/14

J:\20121445\Dwg\Chapter 2 – Plan Preparation\SAMPLE PLANS – EPP ONLY\Span Wire Example Plan.dwg Last Saved By: brieder, 4/11/2014 11:27 AM Last Printed By: Rieder, Brent, 4/11/2014 11:36 AM (No Xrefs)