FIELD WIRING HOOK-UP CHART

SIGNAL HEAD #	INDICATION	FIELD TERMINAL	FLASH
1 (NBLT)	R	ø6 R	Y
	Y	ø6 Y	
	G	ø6 G	
	◄Y	ø1 Y	
	◄G	ø1 G	
2 (NB)	R	ø6 R	Y
	Y	ø6 Y	
	G	ø6 G	
3 (EBLT)	◄R	ø3 R	R
	◄Y	ø3 Y	
	◄G	ø3 G	
4 (EBLT)	◄R	ø3 R	R
	◄Y	ø3 Y	
	◄G	ø3 G	
5 (EB)	R	ø8 R	R
	Y	ø8 Y	
	G	ø8 G	
6 (EBRT)	R	ø8 R	R
	Y	ø8 Y	
	G	ø8 G	
	Y►	ø1 Y	
	G►	ø1 G	
7 (SBLT)	R	ø2 R	Y
	Y	ø2 Y	
	G	ø2 G	
	◄Y	ø5 Y	
	◄G	ø5 G	
8 (SB)	R	ø2 R	Y
	Y	ø2 Y	
	G	ø2 G	
9 (WBLT)	R	ø4 R	R
	Y	ø4 Y	
	G	ø4 G	
	◄Y	ø7 Y	
	◄G	ø7 G	
10 (WB)	R	ø4 R	R
	Y	ø4 Y	
	G	ø4 G	
N	WALK	G ø4-W	OFF
	DON'T WALK	R ø4-DW	
S	WALK	G ø8-W	OFF
	DON'T WALK	R ø8-DW	
E	WALK	G ø6-W	OFF
	DON'T WALK	R ø6-DW	
W	WALK	G ø2-W	OFF
	DON'T WALK	R ø2-DW	

TIMING CHART

PHASE	ø1	ø2	ø3	ø4	ø5	ø6	ø7	ø8
MOVEMENT	NBLT	SB	EBLT	WB	SBLT	NB	WBLT	EB
MIN INITIAL	8	23	8	10	8	23	8	10
WALK	0	7	0	7	0	7	0	7
PED CLR	0	17	0	22	0	17	0	22
PASS / EXT	3.7	2.5	3.7	3.7	3.7	2.5	3.7	3.7
YELLOW	3.0	3.9	3.0	3.6	3.0	3.9	3.0	3.6
RED CLR	3.7	1.8	4.2	2.4	3.3	1.8	3.5	2.4
MAX GRN 1	30	50	25	50	30	50	25	50
MAX GRN 2	30	50	25	50	30	50	25	50
PED RECALL	OFF	ON	OFF	OFF	OFF	ON	OFF	OFF
VEH RECALL	OFF	MIN	OFF	OFF	OFF	MIN	OFF	OFF
MEMORY	OFF	ON	OFF	OFF	OFF	ON	OFF	OFF

DETECTOR ASSIGNMENTS

DET (#)	DETECTOR ASSIGNMENT		PHASE	LOOP SIZE (W'xL')	LOOP DELAY DATA		DET UNIT RACK & CABLE LABEL
	UNIT (#)	CHANNEL (#)			DELAY IN SECONDS	INHIBIT DELAY DURING GRN ø	LOOP
L6A	1	1	ø6	Existing	–	–	NB (L)
L6B	1	2	ø6	Existing	–	–	NB (R)
L1	2	1	ø1	Existing	3	ø1	NBLT
L5	2	2	ø5	6'x25'	3	ø5	SBLT
L2A	3	1	ø2	Existing	–	–	SB (L)
L2B	3	2	ø2	Existing	–	–	SB (R)
L3A	4	1	ø3	5'x33'	3	ø3	EBLT (L)
L3B	4	2	ø3	5'x32'	–	ø3	EBLT (R)
L8A	5	1	ø8	5.5'x31'	–	ø8	EB
L8B	5	2	ø8	5'x30'	12	ø8	EBRT
L4	6	1	ø4	Existing	–	ø4	WB
L7	6	2	ø7	Existing	3	ø7	WBLT

LOOPS ARE TO BE HOOKED TO THE UNIT AND CHANNEL AS INDICATED TO ENHANCE LOOP PERFORMANCE AND DECREASE LOOP CROSSTALK.

WIRING DIAGRAM LEGEND

- L-X Detector Loop
- Proposed Vehicular Signal Head
- X Pedestrian Signal Head
- ● PB Pedestrian Pushbutton

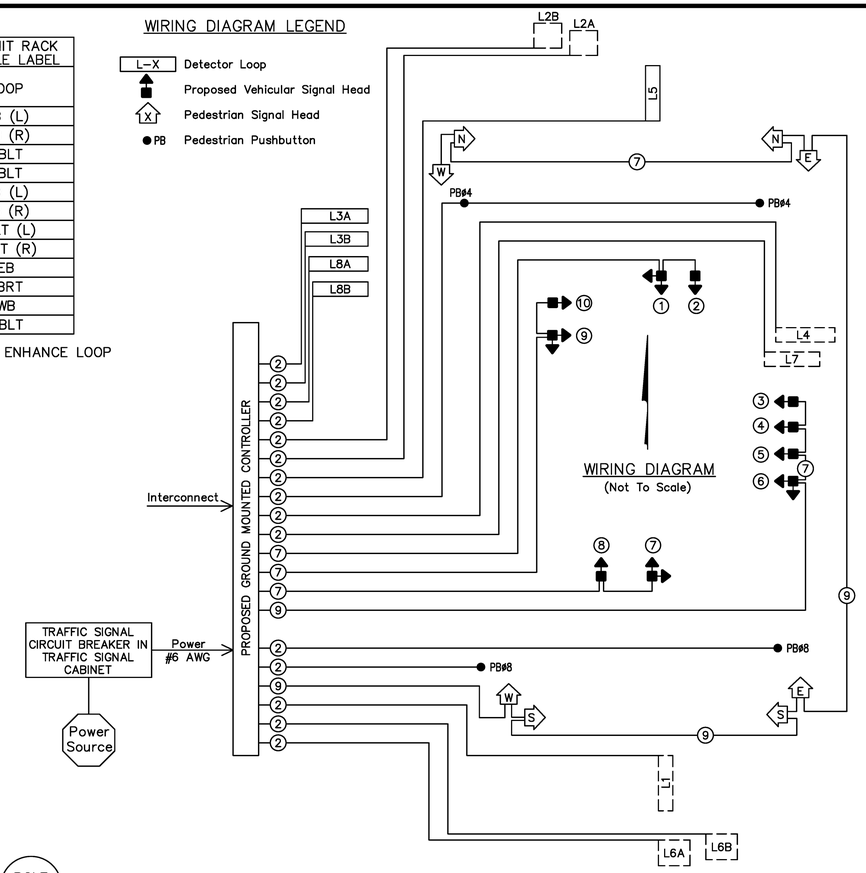

ITEM 632 REMOVAL OF TRAFFIC EXISTING SIGNAL INSTALLATION, AS PER PLAN

QUANTITY	REMOVED ITEM DESCRIPTION	DELIVERED TO 1820 E 17th AV	DISPOSED OF BY PROJECT
2	TRAFFIC PULL BOX	X	
4	PEDESTRIAN PUSHBUTTON	X	
1	SIGNAL WIRES (LUMP SUM)		X
4	FOUNDATIONS		X
1	SIGNAL CONDUIT (LUMP SUM)		X
1	CONTROLLER	X	
1	SPAN WIRE (LUMP SUM)		X
8	PEDESTRIAN SIGNAL HEAD	X	
8	SIGNAL HEADS	X	
1	POWER SERVICE		X
3	SIGNAL POLES	X	
1	PEDESTAL	X	

NOTES:

SEE CITY OF COLUMBUS, TRAFFIC SIGNAL DESIGN MANUAL, SECTION 2.5 FOR A COMPLETE LIST OF PLAN SHEET NOTES.

INTERSECTION LAYOUT NOTES:

SEE CITY OF COLUMBUS, TRAFFIC SIGNAL DESIGN MANUAL, SECTION 2.4 FOR A COMPLETE LIST OF PLAN SHEET NOTES.

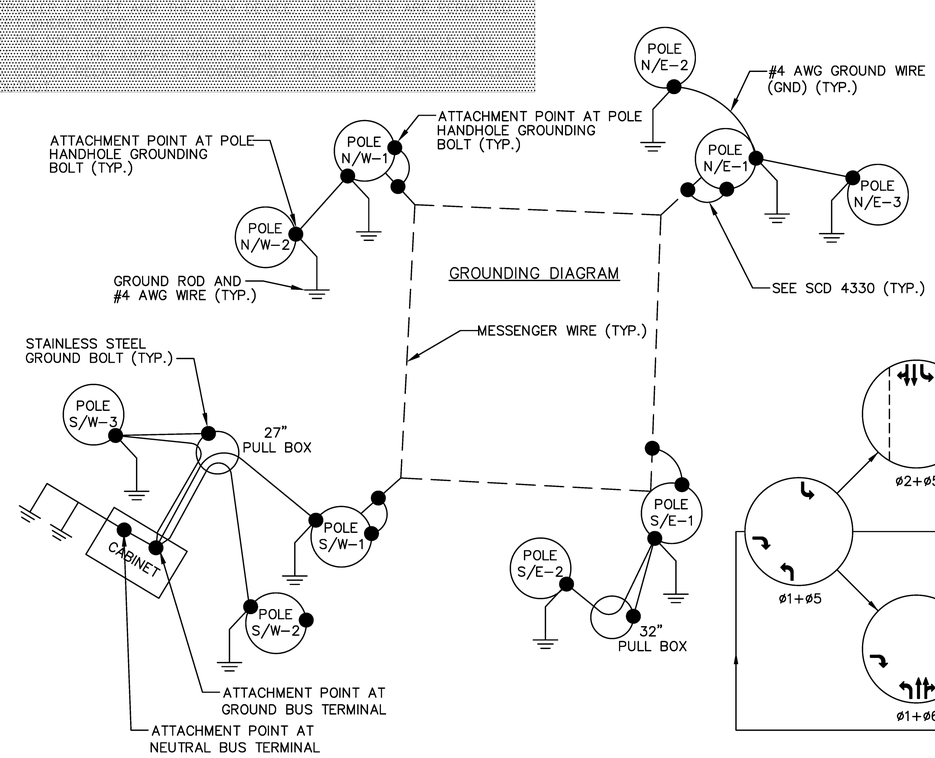

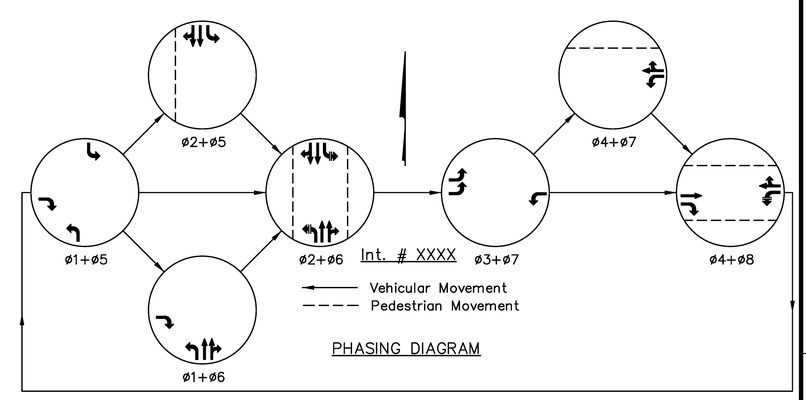

XXXX E

REVISED 4/11/14

TRAFFIC SIGNAL DETAILS
STREET A AT STREET B

PROJECT TITLE
PHASE OR PROJECT ADDRESS (OR C.I.P. NUMBER)

SCALE None

CALCULATED XXX | CHECKED XXX

XX / XX

J:\20121445\Dwg\Chapter 2 – Plan Preparation\SAMPLE PLANS – EPP ONLY\Span Wire Example Plan.dwg Last Saved By: brieder, 4/11/2014 11:27 AM Last Printed By: Rieder, Brent, 4/11/2014 11:36 AM (No Xref)