Standard Drawing Index

City of Columbus, Ohio
Department of Public Service
Division of Design and Construction

Reference Index of Standard Construction Drawings
[4000-4409]

STANDARD DRAWING No.	STANDARD DRAWING TITLE	REVISION DATE
4000	Roadway Conduit Standards	05/01/2014
4001	Traffic Signal Conduit Bank Standards	05/01/2014
4002	Conduit Guard Rail Protection	05/01/2014
4020	Pull Box Underdrain	05/01/2014
4021	27” Pull Box	05/01/2014
4022	32” Pull Box	05/01/2014
4023	48” Pull Box	05/01/2014
4024	Loop pull box installed over IC duct bank	05/01/2014
4050	Signal Cable Conduit Riser Installation	05/01/2014
4051	Power Service Conduit Riser for Ground Mounted Cabinet	05/01/2014
4052	Power Service Conduit Riser for Pole Mounted Cabinet	05/01/2014
4100	5’ Pedestal, Pushbutton Mounting	05/01/2014
4101	10.7’ Pedestal – Pedestrian Signal Head Mounting	05/01/2014
4102	12.7’ Pedestal – Vehicular Signal Head Mounting	05/01/2014
4103	17.5’ Pedestal –Street Name Sign Mounting	05/01/2014
4104	21’ Pedestal – Vehicular Signal Head Mounting	05/01/2014
4105	Transformer Base	05/01/2014
4106	10.7’ Decorative Pedestal	05/01/2014
4110	Video Detector/Traffic Flow Monitor Bracket Arm	05/01/2014
4111	Traffic Flow Monitor	05/01/2014
4120	Standard City of Columbus Mast Arm	05/01/2014
4121	Decorative City of Columbus Mast Arm	05/01/2014
4122	Mechanical Dampening Device	05/01/2014
4160	Signal Support / Strain Pole Foundation	05/01/2014
4161	Pole Foundation In Sidewalk Area	05/01/2014
4162	Traffic Signal Controller Cabinet Foundation	05/01/2014
4163	Pedestal Foundation	05/01/2014
4170	Strain Pole	05/01/2014
4200	Pole Mountings standards	Coming soon
4201	Overhead Signal Attachment Mastarm	Coming soon
4202	Overhead Signal Attachments - Span Wire	05/01/2014
4205	Traffic Signal Backplate	05/01/2014
4230	Pushbutton and Sign Installation Detail	05/01/2014

STANDARD DRAWING No.	STANDARD DRAWING TITLE	REVISION DATE
4250	Sign Hanger Assembly, Span Wire	05/01/2014
4251	Sign Hanger Assembly, Mast Arm – Rigid Mounted	05/01/2014
4252	Sign Hanger Assembly, Mast Arm – Free Swinging	05/01/2014
4253	Sign Support Assembly, Pole Mounted	05/01/2014
4300	Vehicle Detector Standards	05/01/2014
4301	Bicycle Detector Markings	05/01/2014
4330	Messenger Wire Details 1	05/01/2014
4331	Messenger Wire Details 2	05/01/2014
4332	Left Turn Trap Prevention Cut-Out Relay	05/01/2014
4333	Inhibit Delay Relay	05/01/2014
4400	Interconnect Pedestal Amplifier Cabinet	Coming soon
4401	Interconnect Coaxial Cable Installation	Coming soon
4402	Interconnect Fiber Optic Cable Installation	Coming soon
4403	Interconnect Conduit Attachment	Coming soon
4404	Interconnect Drop Cable Attachment	Coming soon
4405	Communications Node-Foundation Plan	Coming soon
4406	CCTV Assembly Installation	Coming soon
4407	CCTV 70’ Concrete Pole Installation	Coming soon
4408	Steel Pole Installation	Coming soon
4409	Lowering Device	Coming soon

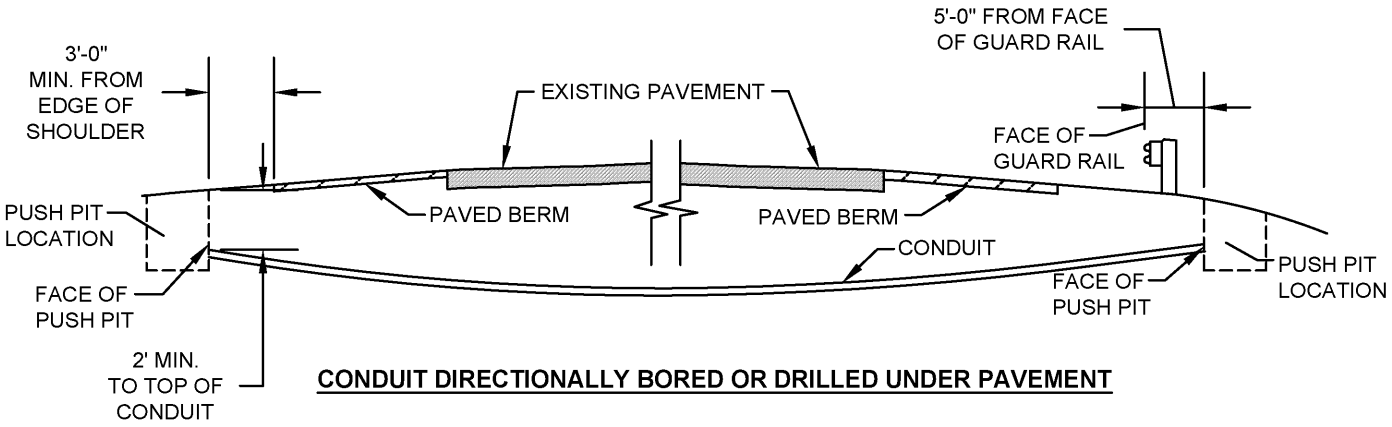

CONDUIT DIRECTIONALLY BORED OR DRILLED UNDER PAVEMENT

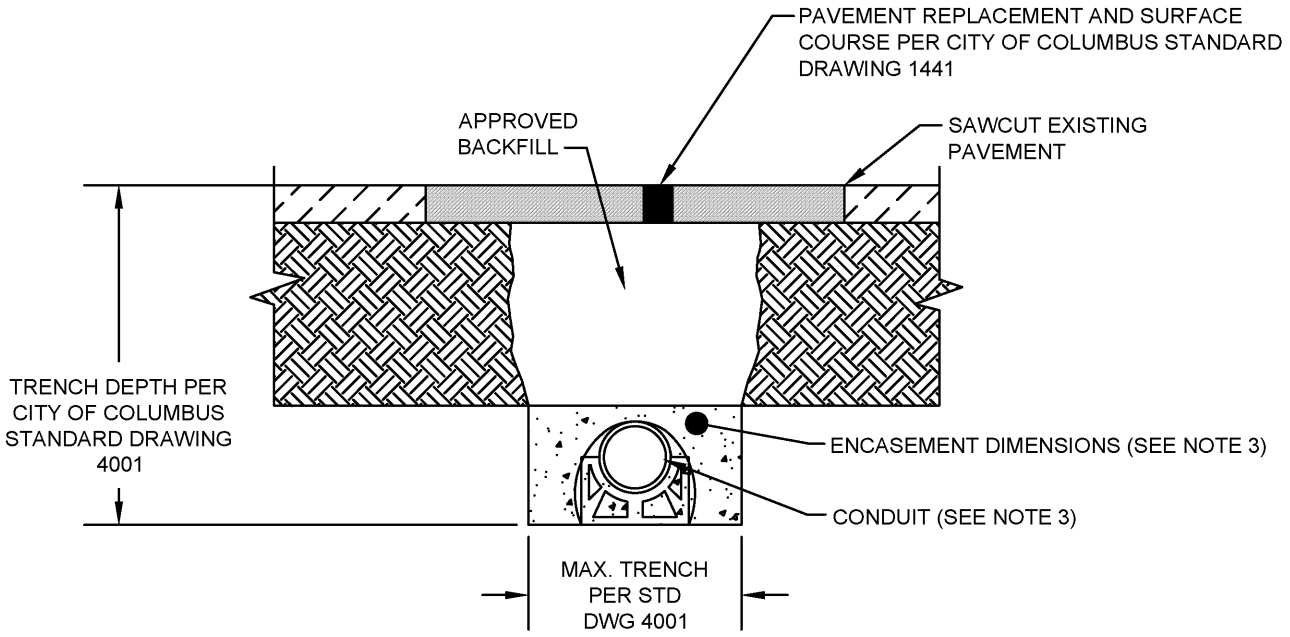

TRENCH IN PAVED AREA

NOTES:

1. CONDUIT THAT IS DRILLED/DIRECTIONALLY BORED SHALL BE (725.052, EPEC-80-HDPE) OR 725.20 SCHEDULE 80. JACKED CONDUIT SHALL BE RIGID METAL CONDUIT (725.04).
2. THE CONTRACTOR WITH THE APPROVAL OF THE ENGINEER OR AT THE DIRECTION OF THE PLANS OR THE ENGINEER SHALL POTHOLE THE PROPOSED JACKING/BORED AREA.
3. FOR TRAFFIC SIGNAL CONDUIT BANK AND CONDUIT SEE CITY OF COLUMBUS STANDARD DRAWING 4001.

ROADWAY CONDUIT STANDARDS

CITY OF COLUMBUS, OHIO
DEPARTMENT OF PUBLIC SERVICE
DIVISION OF DESIGN AND CONSTRUCTION

STD DWG
4000

5/01/2014

CITY ENGINEER

SHT 1 OF 2

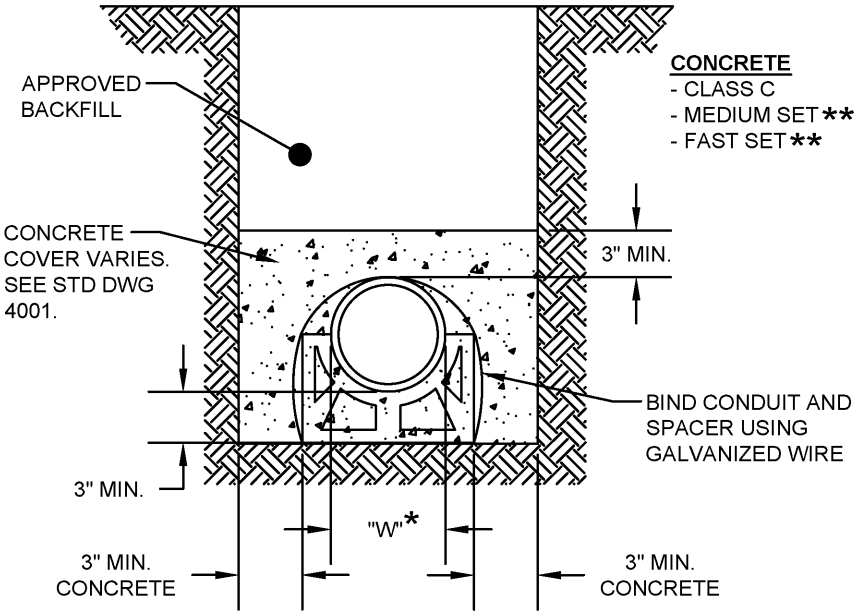

*NOTE:
"W" IS WIDTH OF CONDUIT.

** USE AS DIRECTED.

TRENCH SECTION
CONCRETE ENCASED CONDUIT

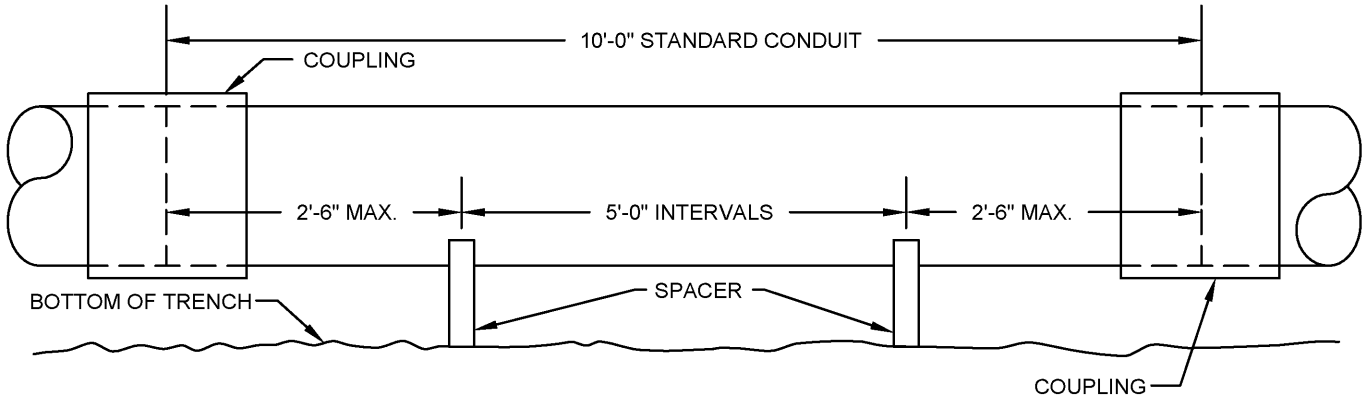

SIDE ELEVATION
CONCRETE ENCASED CONDUIT

ROADWAY CONDUIT STANDARDS

CITY OF COLUMBUS, OHIO DEPARTMENT OF PUBLIC SERVICE DIVISION OF DESIGN AND CONSTRUCTION	STD DWG 4000
Hassan Zahran	5/01/2014
CITY ENGINEER	SHT 2 OF 2

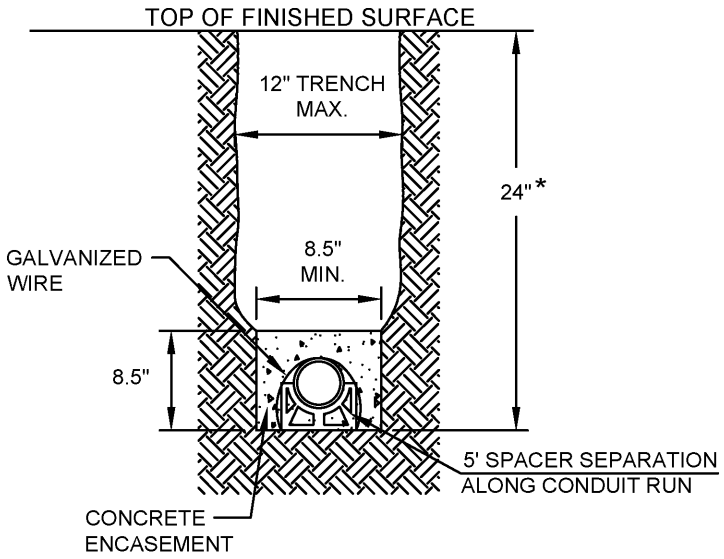

ONE 2" CONDUIT ENCASED

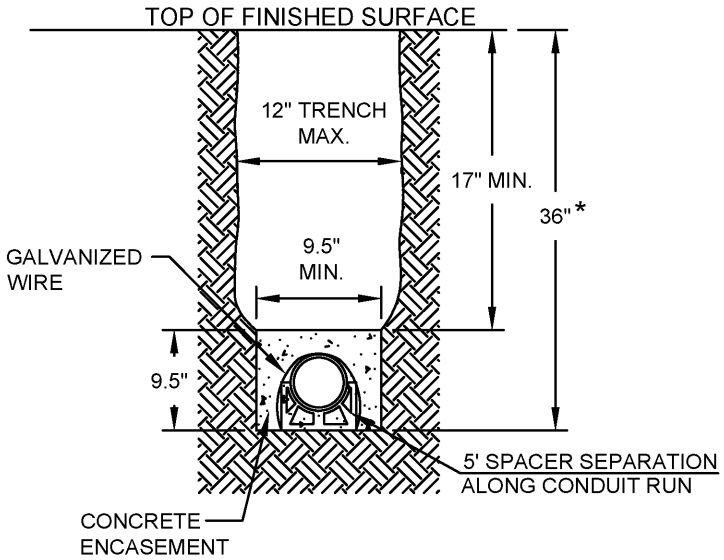

ONE 3" CONDUIT ENCASED

* TRENCH DEPTH MAY VARY PER PLAN DETAILS

NOTE:

SMALLER DIAMETER CONDUITS MAY NEED WRAPPED SEPARATELY.

TRAFFIC SIGNAL CONDUIT BANK STANDARDS

CITY OF COLUMBUS, OHIO
DEPARTMENT OF PUBLIC SERVICE
DIVISION OF DESIGN AND CONSTRUCTION

STD DWG
4001

5/01/2014

CITY ENGINEER

SHT 1 OF 9

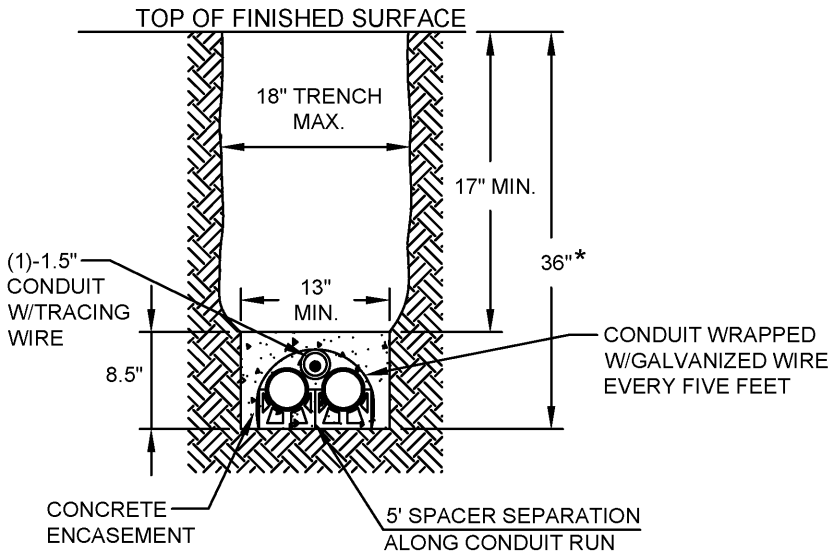

TWO 2" CONDUITS W/ONE 1.5" CONDUIT FOR TRACER WITH 3" CONCRETE ENCASEMENT (4-3/8" CENTER-CENTER CONDUIT SEPARATION)

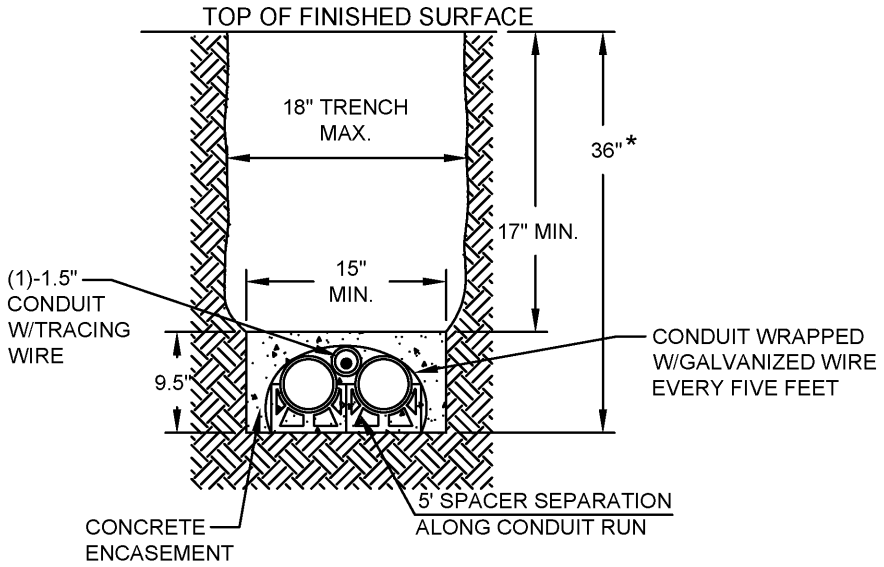

TWO 3" CONDUITS W/ONE 1.5" CONDUIT FOR TRACER WITH 3" CONCRETE ENCASEMENT (5-1/2" CENTER-CENTER CONDUIT SEPARATION)

* TRENCH DEPTH MAY VARY PER PLAN DETAILS

NOTE:

SMALLER DIAMETER CONDUITS MAY NEED WRAPPED SEPARATELY.

TRAFFIC SIGNAL CONDUIT BANK STANDARDS

CITY OF COLUMBUS, OHIO
DEPARTMENT OF PUBLIC SERVICE
DIVISION OF DESIGN AND CONSTRUCTION

STD DWG
4001

5/01/2014

CITY ENGINEER

SHT 2 OF 9

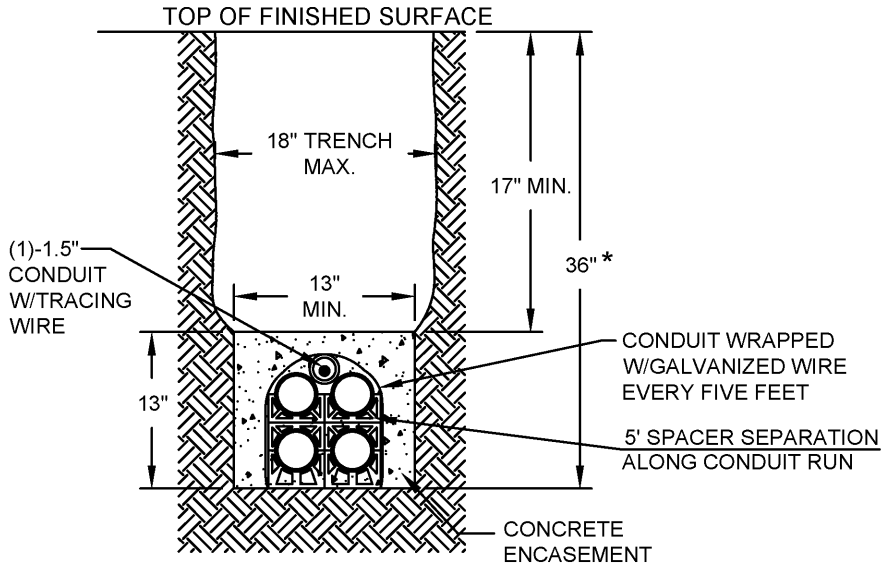

FOUR 2" CONDUITS W/ONE 1.5" CONDUIT FOR TRACER WITH 3" CONCRETE ENCASEMENT (4-3/8" CENTER-CENTER CONDUIT SEPARATION)

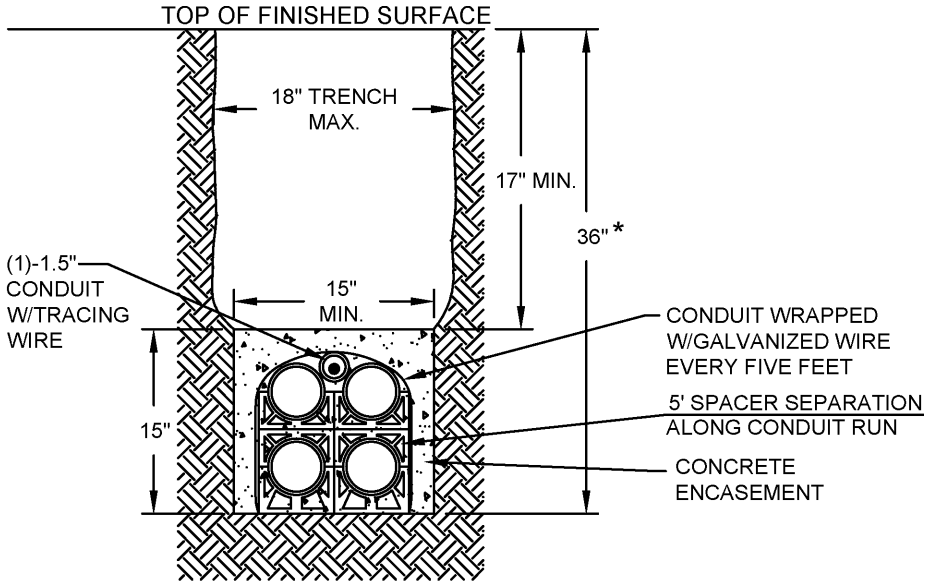

FOUR 3" CONDUITS W/ONE 1.5" CONDUIT FOR TRACER WITH 3" CONCRETE ENCASEMENT (5-1/2" CENTER-CENTER CONDUIT SEPARATION)

* TRENCH DEPTH MAY VARY PER PLAN DETAILS

NOTE:

SMALLER DIAMETER CONDUITS MAY NEED WRAPPED SEPARATELY.

TRAFFIC SIGNAL CONDUIT BANK STANDARDS

CITY OF COLUMBUS, OHIO
DEPARTMENT OF PUBLIC SERVICE
DIVISION OF DESIGN AND CONSTRUCTION

STD DWG
4001

5/01/2014

CITY ENGINEER

SHT 3 OF 9

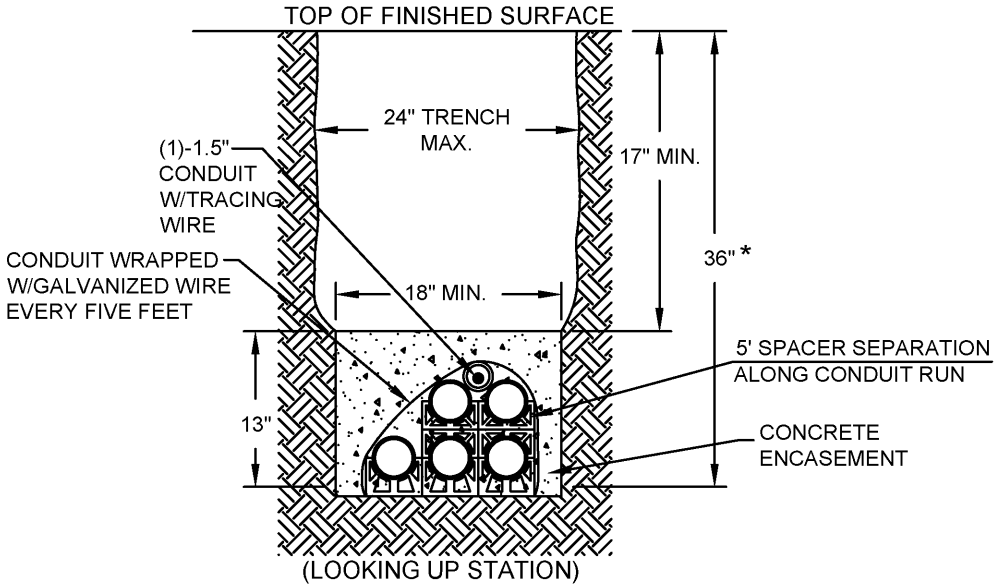

FIVE 2" & ONE 1.5" CONDUIT BANK
3" CONCRETE ENCASEMENT - TYPE 1
(4-3/8" CENTER-CENTER CONDUIT SEPARATION)

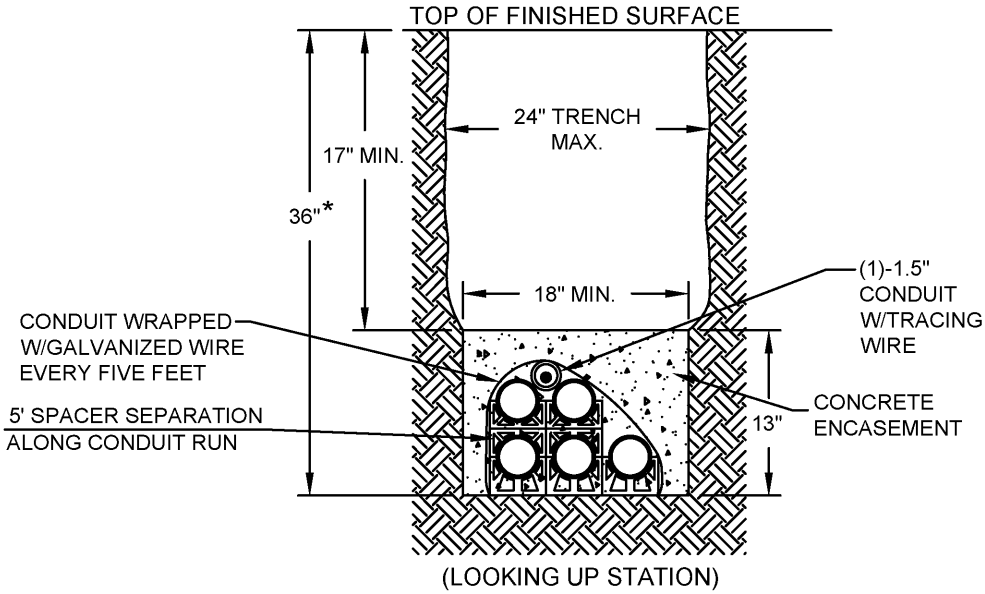

FIVE 2" & ONE 1.5" CONDUIT BANK
3" CONCRETE ENCASEMENT - TYPE 2
(4-3/8" CENTER-CENTER CONDUIT SEPARATION)

* TRENCH DEPTH MAY VARY PER PLAN DETAILS

NOTE:

SMALLER DIAMETER CONDUITS MAY NEED WRAPPED SEPARATELY.

TRAFFIC SIGNAL CONDUIT BANK STANDARDS

CITY OF COLUMBUS, OHIO
DEPARTMENT OF PUBLIC SERVICE
DIVISION OF DESIGN AND CONSTRUCTION

STD DWG
4001

5/01/2014

CITY ENGINEER

SHT 4 OF 9

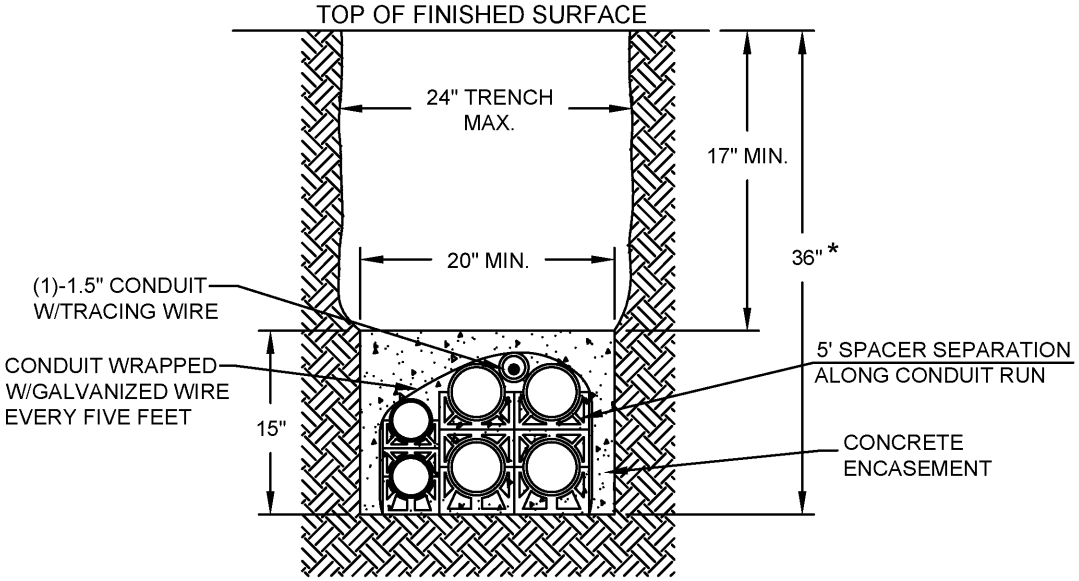

(LOOKING UP STATION)

FOUR 3", TWO 2" & ONE 1.5" CONDUIT BANK
3" CONCRETE ENCASEMENT - TYPE 1
(5-1/2" CENTER-CENTER CONDUIT SEPARATION)

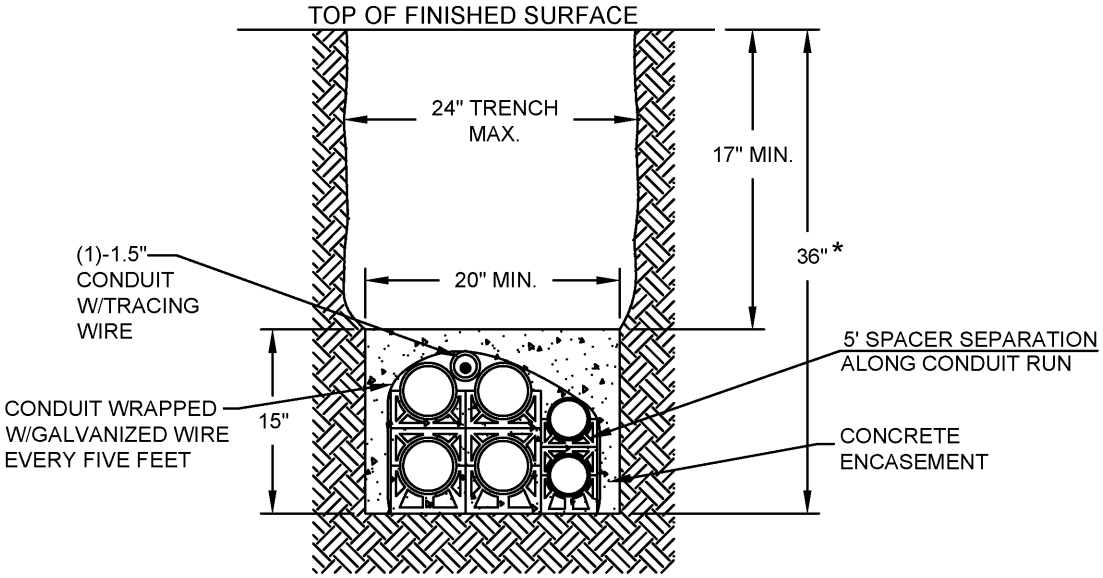

(LOOKING UP STATION)

FOUR 3", TWO 2" & ONE 1.5" CONDUIT BANK
3" CONCRETE ENCASEMENT - TYPE 2
(5-1/2" CENTER-CENTER CONDUIT SEPARATION)

* TRENCH DEPTH MAY VARY PER PLAN DETAILS

NOTE:

SMALLER DIAMETER CONDUITS MAY NEED WRAPPED SEPARATELY.

TRAFFIC SIGNAL CONDUIT BANK STANDARDS

CITY OF COLUMBUS, OHIO
DEPARTMENT OF PUBLIC SERVICE
DIVISION OF DESIGN AND CONSTRUCTION

STD DWG
4001

5/01/2014

CITY ENGINEER

SHT 5 OF 9

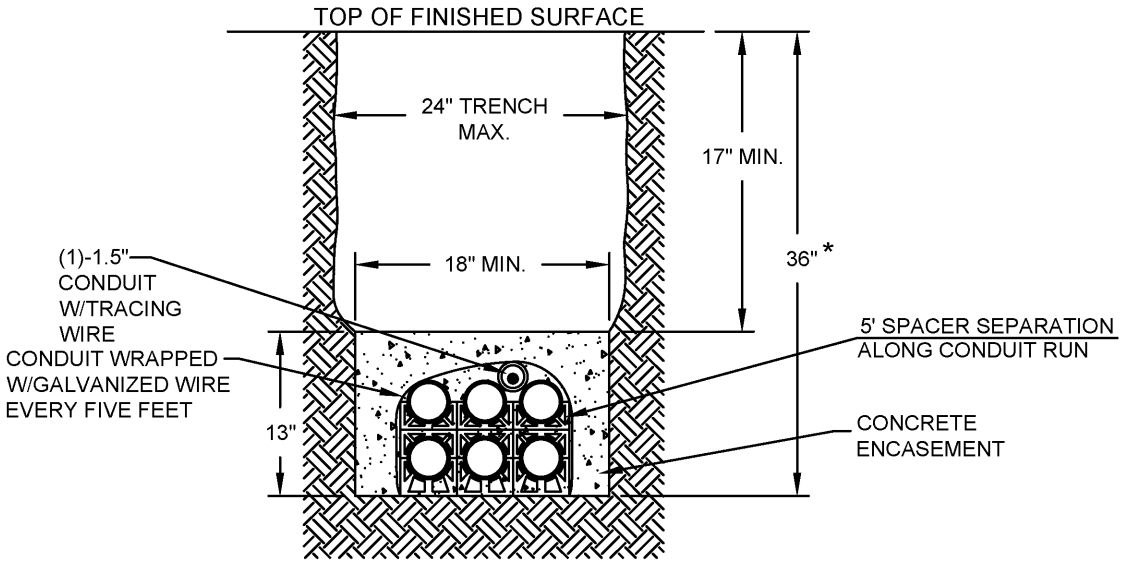

SIX 2" & ONE 1.5" CONDUIT BANK
3" CONCRETE ENCASEMENT
(4-3/8" CENTER-CENTER CONDUIT SEPARATION)

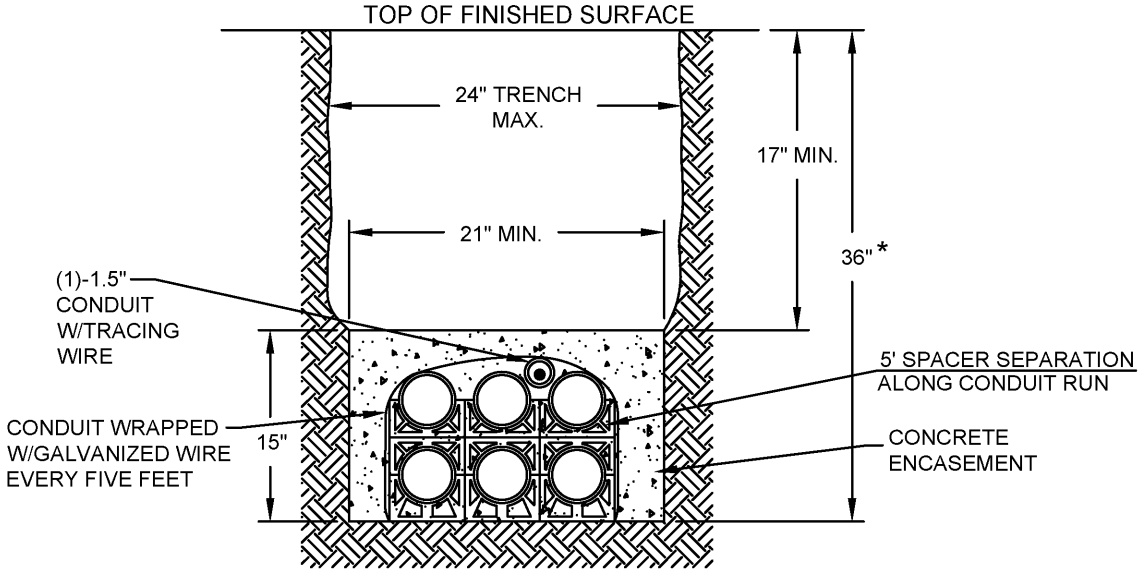

SIX 3" & ONE 1.5" CONDUIT BANK
3" CONCRETE ENCASEMENT
(5-1/2" CENTER-CENTER CONDUIT SEPARATION)

* TRENCH DEPTH MAY VARY PER PLAN DETAILS

NOTES:

ARRANGEMENT OF MULTICELL CONDUIT SHALL BE DETERMINED BY DESIGN.

SMALLER DIAMETER CONDUITS MAY NEED WRAPPED SEPARATELY.

TRAFFIC SIGNAL CONDUIT BANK STANDARDS

CITY OF COLUMBUS, OHIO
DEPARTMENT OF PUBLIC SERVICE
DIVISION OF DESIGN AND CONSTRUCTION

STD DWG
4001

5/01/2014

CITY ENGINEER

SHT 6 OF 9

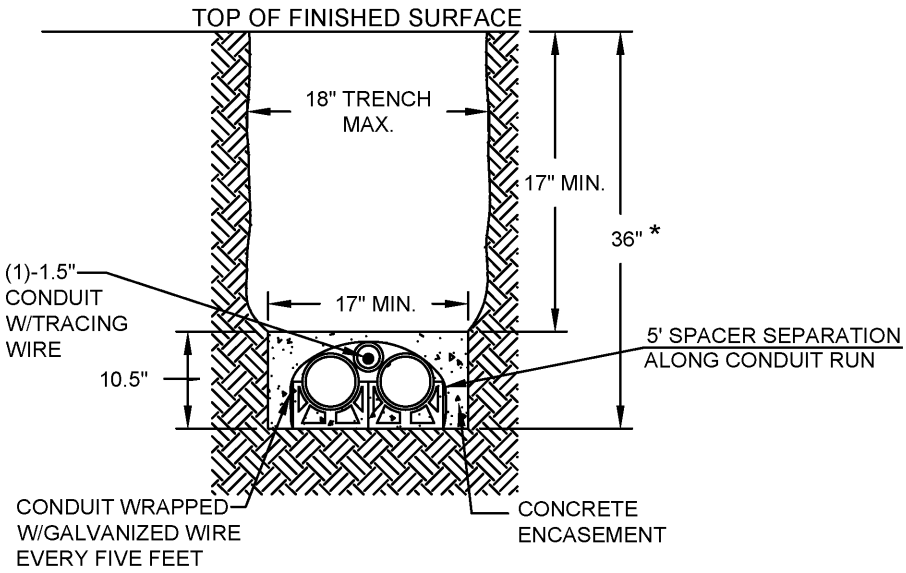

TWO 4" CONDUITS W/ONE 1.5" CONDUIT FOR TRACER WITH 3" CONCRETE ENCASEMENT (6-1/2" CENTER-CENTER CONDUIT SEPARATION)

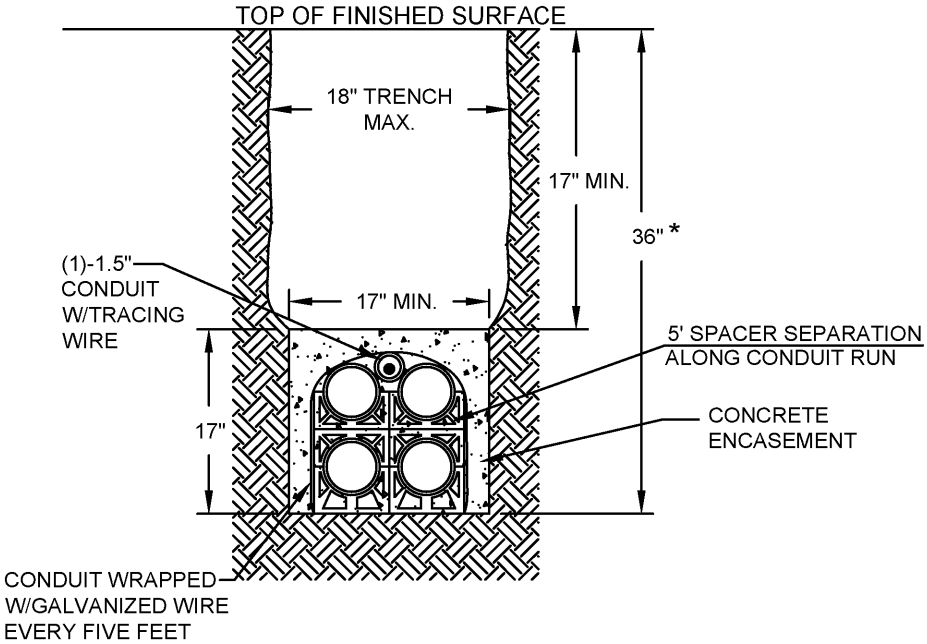

FOUR 4" CONDUITS W/ONE 1.5" CONDUIT FOR TRACER WITH 3" CONCRETE ENCASEMENT (6-1/2" CENTER-CENTER CONDUIT SEPARATION)

* TRENCH DEPTH MAY VARY PER PLAN DETAILS

NOTES:

ARRANGEMENT OF MULTICELL CONDUIT SHALL BE DETERMINED BY DESIGN.

SMALLER DIAMETER CONDUITS MAY NEED WRAPPED SEPARATELY.

TRAFFIC SIGNAL CONDUIT BANK STANDARDS

CITY OF COLUMBUS, OHIO
DEPARTMENT OF PUBLIC SERVICE
DIVISION OF DESIGN AND CONSTRUCTION

STD DWG
4001

Hassan Zahran

5/01/2014

CITY ENGINEER

SHT 7 OF 9

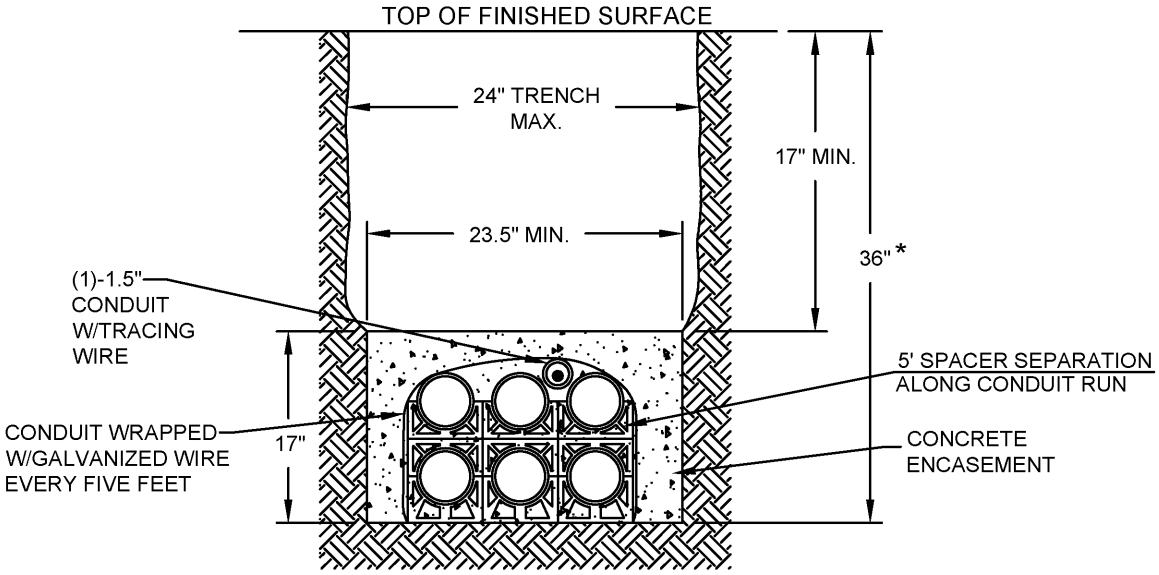

SIX 4" & ONE 1.5" CONDUIT BANK
3" CONCRETE ENCASEMENT
(6-1/2" CENTER-CENTER CONDUIT SEPARATION)

* TRENCH DEPTH MAY VARY PER PLAN DETAILS

NOTES:

ARRANGEMENT OF MULTICELL CONDUIT SHALL BE DETERMINED BY DESIGN.

SMALLER DIAMETER CONDUITS MAY NEED WRAPPED SEPARATELY.

TRAFFIC SIGNAL CONDUIT BANK STANDARDS

CITY OF COLUMBUS, OHIO
DEPARTMENT OF PUBLIC SERVICE
DIVISION OF DESIGN AND CONSTRUCTION

STD DWG
4001

5/01/2014

CITY ENGINEER

SHT 8 OF 9

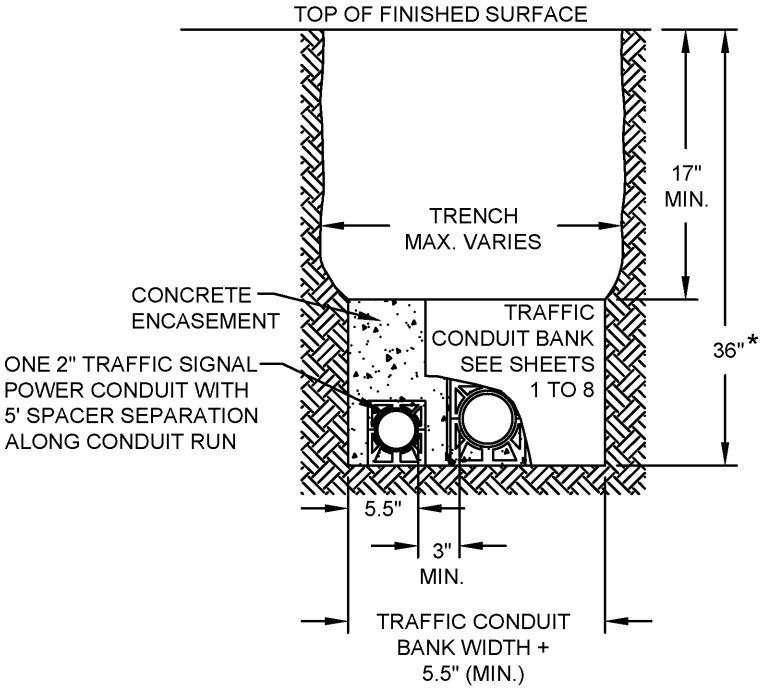

INTERCONNECT / TRAFFIC SIGNAL CONDUIT AND TRAFFIC SIGNAL POWER CONDUIT WITH 3" CONCRETE ENCASEMENT MINIMUM DUCT BANK SEPARATION

* TRENCH DEPTH MAY VARY PER PLAN DETAILS

TRAFFIC SIGNAL CONDUIT BANK STANDARDS

CITY OF COLUMBUS, OHIO DEPARTMENT OF PUBLIC SERVICE DIVISION OF DESIGN AND CONSTRUCTION	STD DWG 4001
Hassan Zahran	2/21/2014
CITY ENGINEER	SHT 9 OF 9

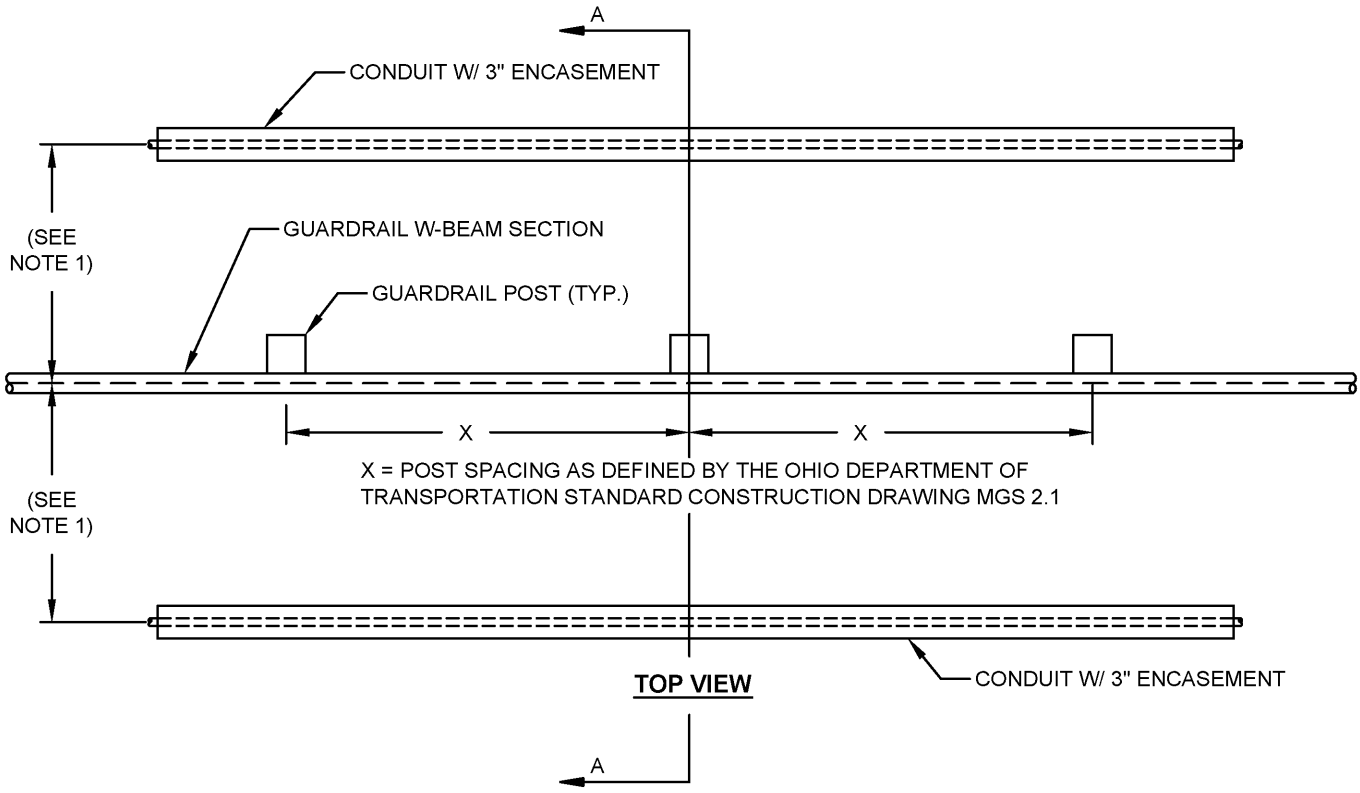

TOP VIEW

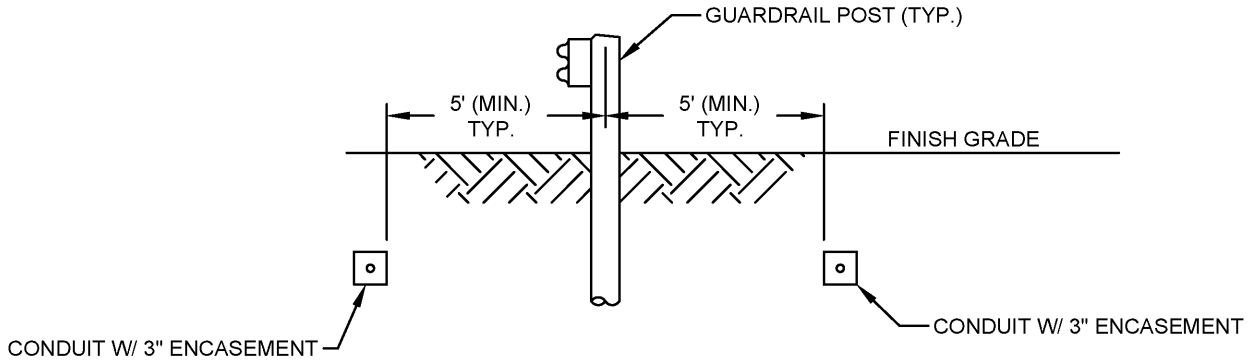

FRONT VIEW
SECTION A-A

NOTES:

1. CONDUIT PLACED PARALLEL TO GUARDRAIL AND WITH AN OFFSET BETWEEN 5' AND 8' SHALL BE ENCASED. CONDUIT MAY NOT BE PLACED CLOSER THAN 5' WHEN PARALLEL TO GUARDRAIL.
2. CONDUIT ENCASEMENT SHALL EXTEND A MINIMUM OF 10' PAST THE LAST GUARD RAIL POST.

CONDUIT PARALLEL TO GUARDRAIL

CONDUIT GUARDRAIL PROTECTION

CITY OF COLUMBUS, OHIO
DEPARTMENT OF PUBLIC SERVICE
DIVISION OF DESIGN AND CONSTRUCTION

STD DWG
4002

5/01/2014

CITY ENGINEER

SHT 1 OF 2

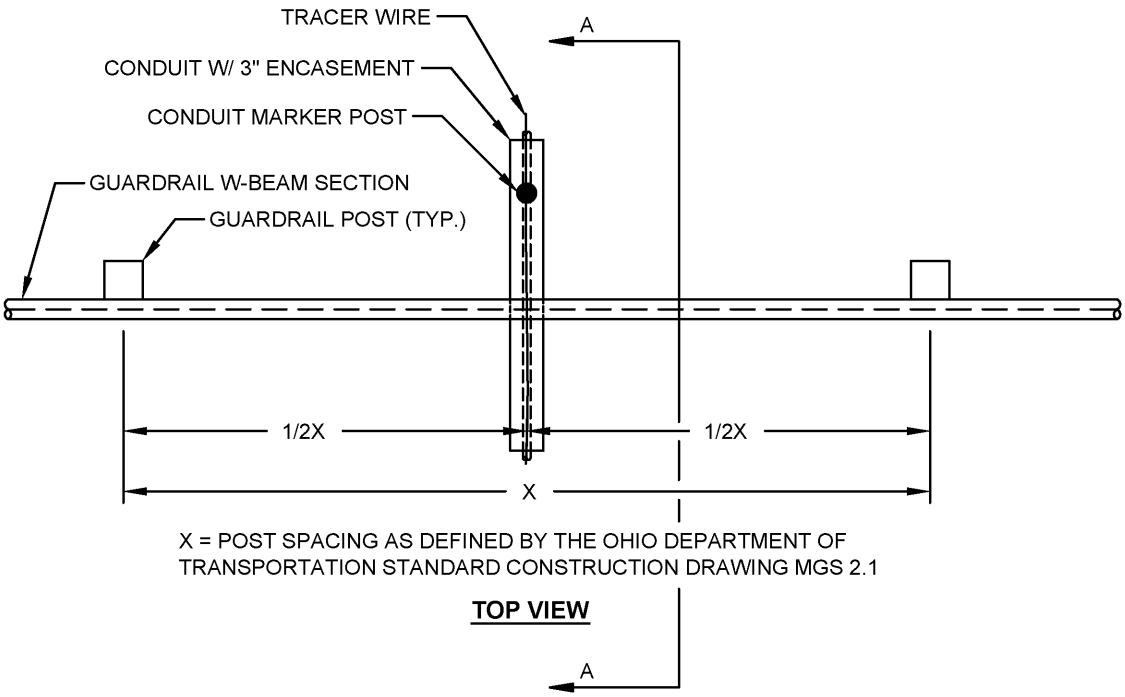

X = POST SPACING AS DEFINED BY THE OHIO DEPARTMENT OF TRANSPORTATION STANDARD CONSTRUCTION DRAWING MGS 2.1

TOP VIEW

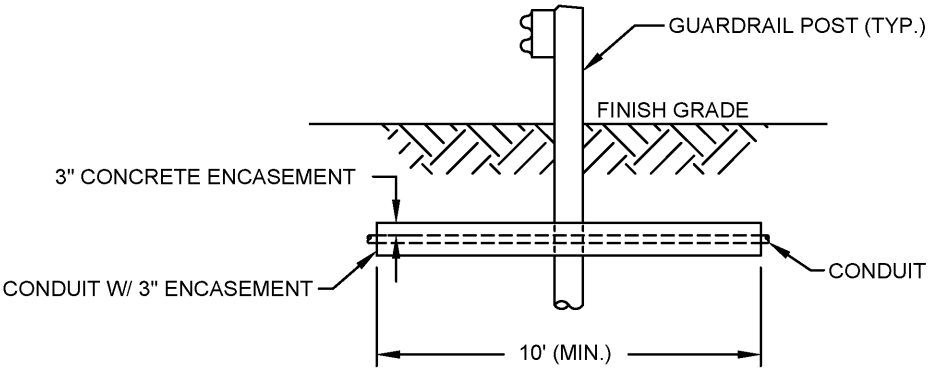

FRONT VIEW
SECTION A-A

CONDUIT CROSSING GUARDRAIL

CONDUIT GUARDRAIL PROTECTION

CITY OF COLUMBUS, OHIO DEPARTMENT OF PUBLIC SERVICE DIVISION OF DESIGN AND CONSTRUCTION	STD DWG 4002
Hassan Zahran	5/01/2014
CITY ENGINEER	SHT 2 OF 2

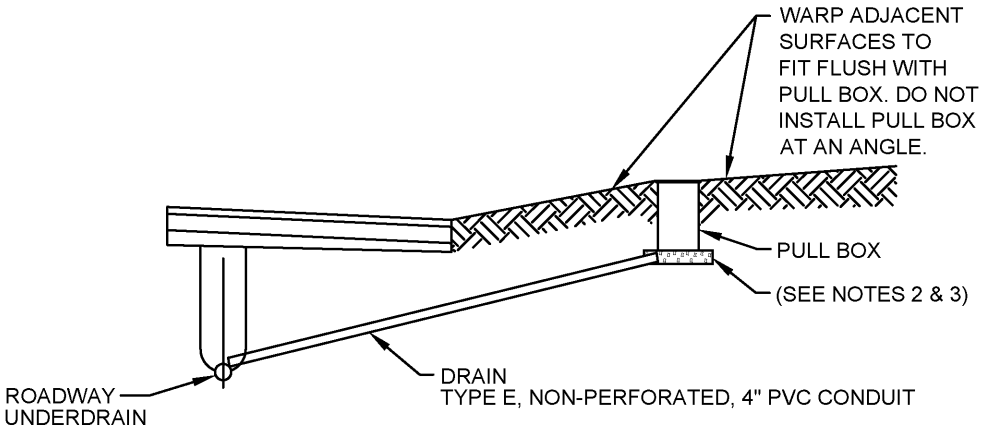

INSTALLATION WITH CONNECTION TO ROADWAY UNDERDRAIN

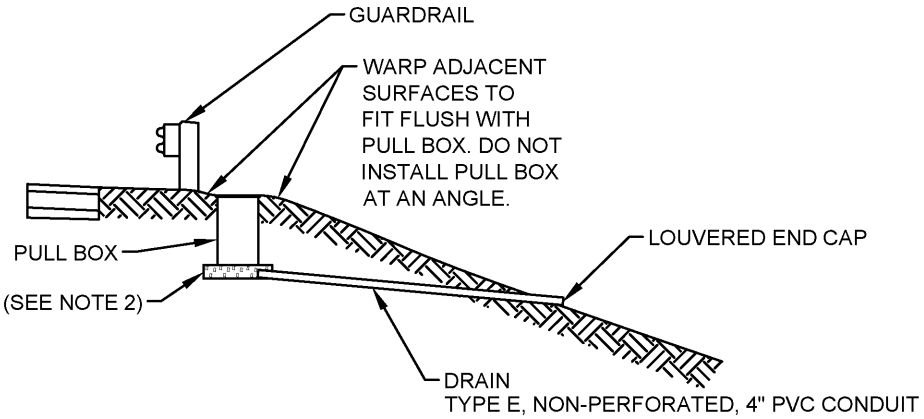

INSTALLATION WITH INDEPENDENT DRAIN

NOTES:

1. AFTER THE CONDUITS HAVE BEEN INSTALLED, ANY OPENING IN THE PULL BOX WALL SHALL BE COMPLETELY FILLED WITH MORTAR OR CONCRETE AND FINISHED FLUSH WITH THE INSIDE PULL BOX WALL. (NO VOIDS)
2. PULL BOX DRAINS IN ACCORDANCE WITH CMSC 603 SHALL BE INSTALLED WHEN SPECIFIED, OR AS DIRECTED BY THE ENGINEER.
3. CONTRACTOR TO VERIFY ROADWAY UNDERDRAIN IS BELOW THE PULL BOX AGGREGATE BEFORE INSTALLING DRAIN.

PULL BOX UNDERDRAIN DETAILS

CITY OF COLUMBUS, OHIO
DEPARTMENT OF PUBLIC SERVICE
DIVISION OF DESIGN AND CONSTRUCTION

STD DWG
4020

5/01/2014

CITY ENGINEER

SHT 1 OF 1

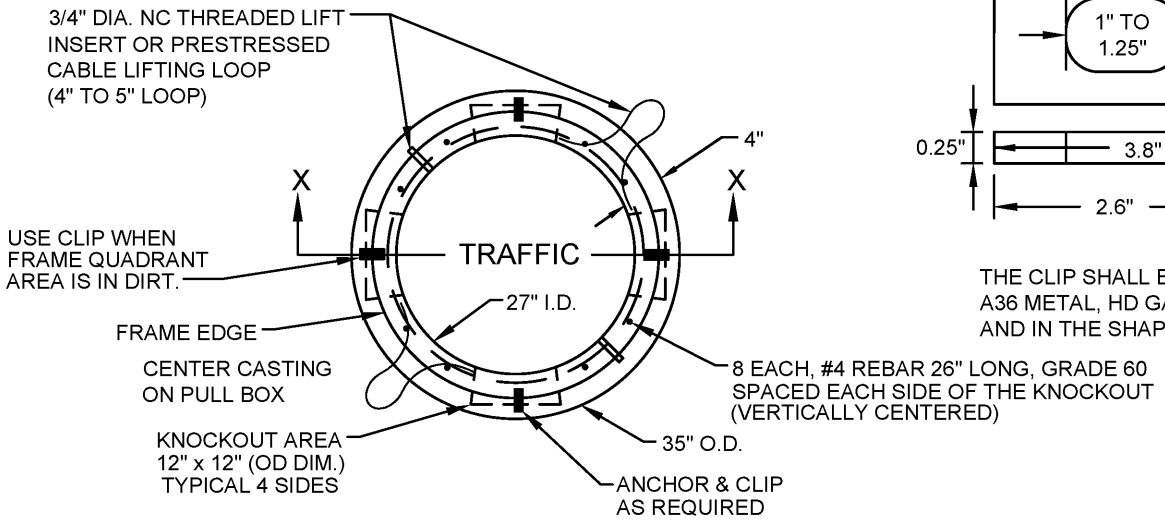

CLIP PROFILE
(NOM. VALUES)

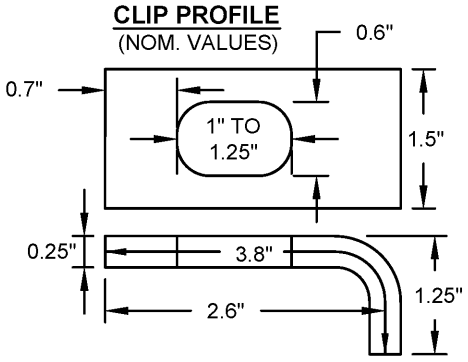

THE CLIP SHALL BE MADE FROM A36 METAL, HD GALV (ASTM A123) AND IN THE SHAPE SHOWN.

TOP VIEW OF CONCRETE PULL BOX

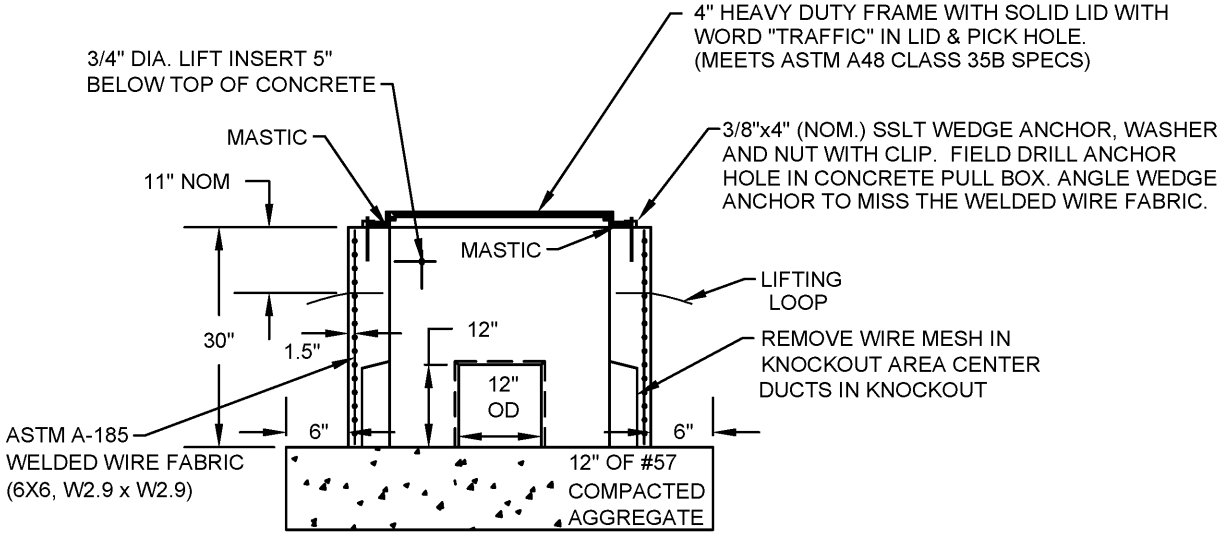

SECTION X-X PULL BOX WITH FRAME AND LID

PULL BOX 27"

CITY OF COLUMBUS, OHIO
DEPARTMENT OF PUBLIC SERVICE
DIVISION OF DESIGN AND CONSTRUCTION

STD DWG
4021

5/01/2014

CITY ENGINEER

SHT 1 OF 3

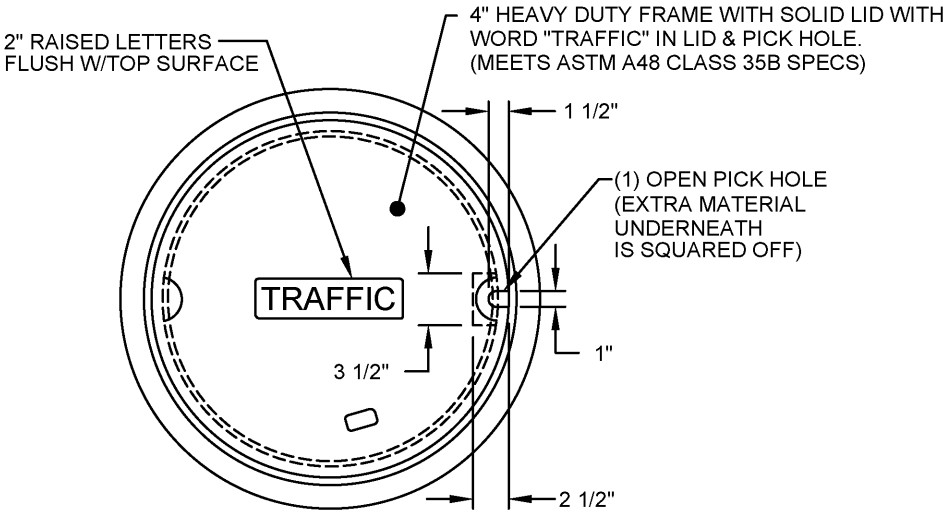

CASTING INSTALLATION: USE THIS SIDE UP WHEN CASTING IS FULLY OR PARTIALLY ENCASED IN ASPHALT OR CONCRETE.

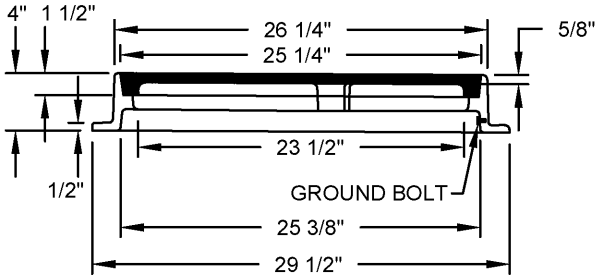

FRAME AND COVER DETAIL

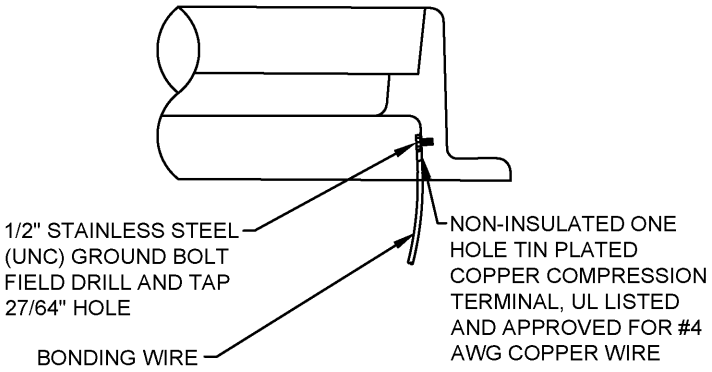

GROUND BOLT INSTALLATION DETAIL

PULL BOX
27"

CITY OF COLUMBUS, OHIO
DEPARTMENT OF PUBLIC SERVICE
DIVISION OF DESIGN AND CONSTRUCTION

STD DWG
4021

Hassan Zahra

5/01/2014

CITY ENGINEER

SHT 2 OF 3

NOTES:

ONE COAT OF WATER REPELLENT SEALER (SEE CITY OF COLUMBUS QUALIFIED PRODUCTS LIST) SHALL BE APPLIED TO THE INSIDE & OUTSIDE OF THE PULL BOX.

CONCRETE SHALL HAVE AIR ENTRAPMENT OF 6% ± 2% AND SHALL HAVE 4500 PSI STRENGTH AT 28 DAYS.

LID RING LOAD TRANSFER IS TO BE DISTRIBUTED BY USE OF A PREFORMED MASTIC JOINT MATERIAL.

CUT OFF CONDUITS SO THEY EXTEND NO MORE THAN THREE INCHES BEYOND THE INSIDE PULL BOX WALL AND PROVIDE BUSHINGS.

WHENEVER POSSIBLE, CONDUITS SHOULD ENTER THE PULL BOX VIA A KNOCKOUT. WHEN APPROVED BY THE DIVISION OF DESIGN AND CONSTRUCTION PERSONNEL, CONDUITS MAY ENTER THE PULL BOX THROUGH ITS WALL ONLY IF THE OPENING IS SAWN OR CORE DRILLED.

THE WEDGE ANCHOR ASSEMBLY SHALL BE OMITTED WHENEVER THE ENTIRE AREA ABOVE THE KNOCKOUT (1/4 OF THE CASTING) IS EITHER ENCASED IN CONCRETE OR ASPHALT. THE ENCASEMENT SHALL BE CENTERED AROUND THE KNOCKOUT.

ENLARGING THE KNOCKOUT AREA IF REQUIRED SHALL BE DONE BY SAW CUTTING THE CONCRETE. NO OTHER METHOD IS ALLOWED. CONTRACTOR SHALL REPLACE THE CONCRETE HOUSING IF DAMAGED AT HIS EXPENSE.

AFTER THE CONDUITS HAVE BEEN INSTALLED, ANY OPENING IN THE PULL BOX WALL SHALL BE TOTALLY FILLED WITH MORTAR OR CONCRETE AND FINISHED FLUSH WITH THE INSIDE PULL BOX WALL. (NO VOIDS)

PULL BOX BEARING CAPACITY TO EXCEED 40,000 POUNDS.

ANY CONDUIT THAT EXITS A PULL BOX, AND DIRECTLY ENTERS ANY ELECTRONIC CABINET, SHALL BE DUCT SEALED IN THE PULL BOX.

THE CONTRACTOR SHALL INSTALL NON-ORGANIC FIBERGLASS PULL TAPE WITH A MINIMUM 1800 FT./LBS TENSION STRENGTH IN CONDUIT TO FACILITATE CABLE PLACEMENT.

ALL UNUSED CONDUITS SHALL BE CAPPED AND THE CAPS SECURED TO THE CONDUITS WITH TAPE.

PULL BOX
27"

CITY OF COLUMBUS, OHIO DEPARTMENT OF PUBLIC SERVICE DIVISION OF DESIGN AND CONSTRUCTION	STD DWG 4021
Hassan Zahran	5/01/2014
CITY ENGINEER	SHT 3 OF 3

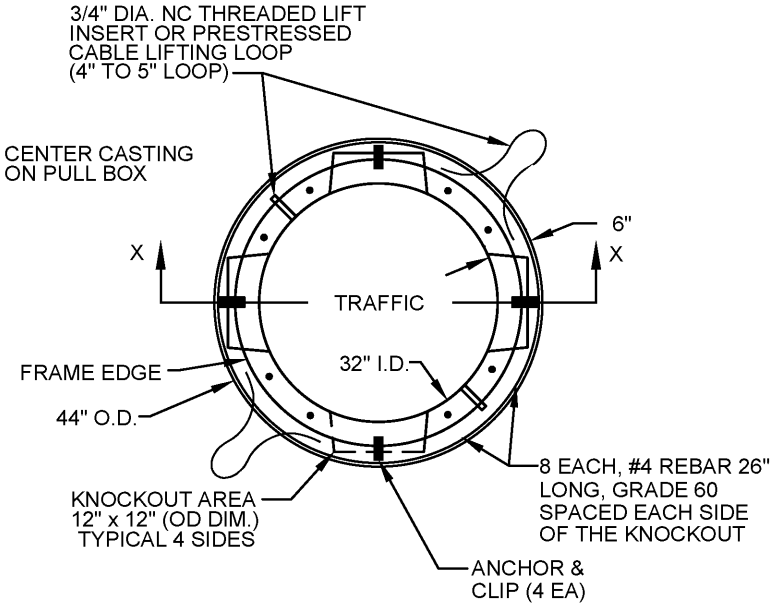

TOP VIEW OF CONCRETE PULL BOX

THE CLIP SHALL BE MADE FROM A36 METAL, HD GALV (ASTM A123) AND IN THE SHAPE SHOWN.

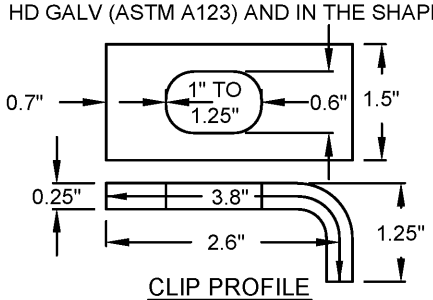

CLIP PROFILE
(NOM. VALUES)

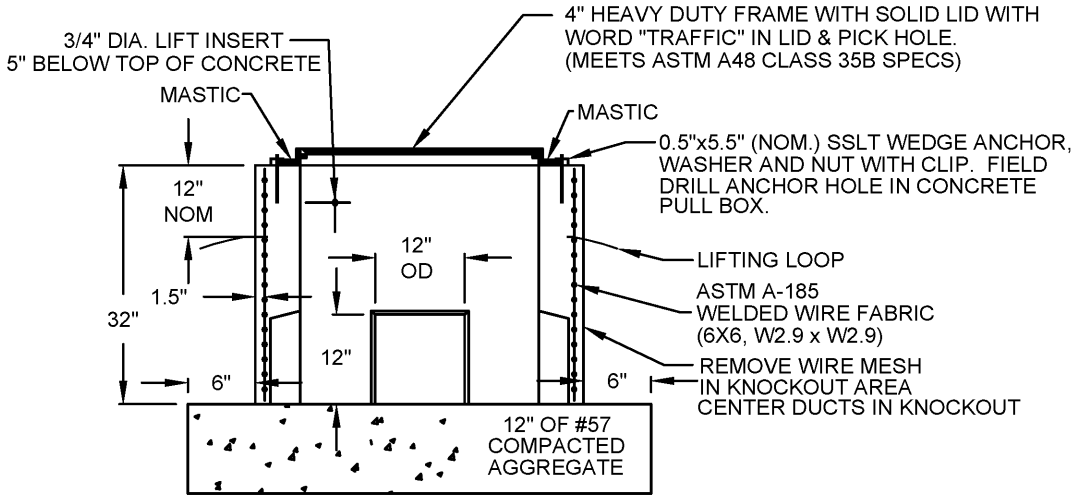

SECTION X-X PULL BOX WITH FRAME AND LID

PULL BOX 32"

CITY OF COLUMBUS, OHIO DEPARTMENT OF PUBLIC SERVICE DIVISION OF DESIGN AND CONSTRUCTION	STD DWG 4022
Hassan Zahran	5/01/2014
CITY ENGINEER	SHT 1 OF 3

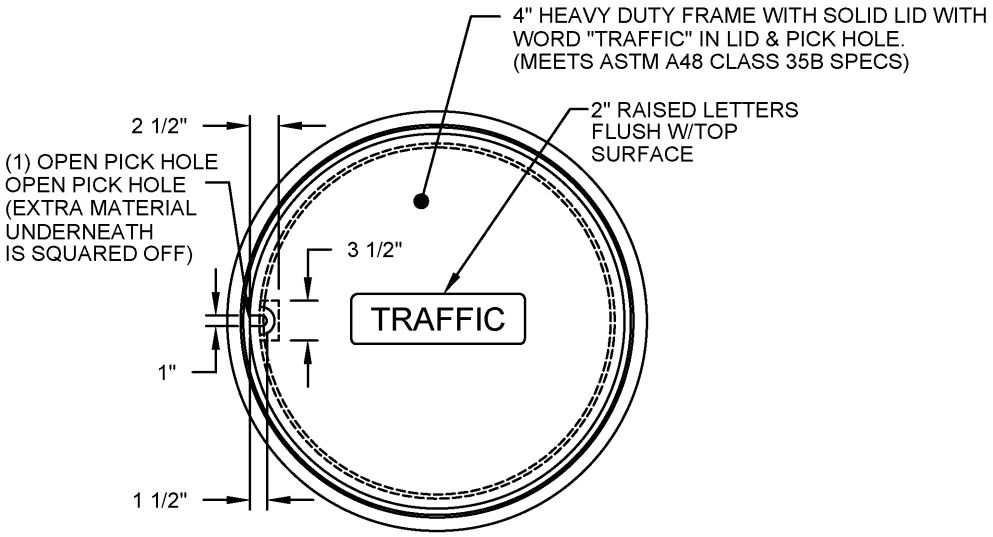

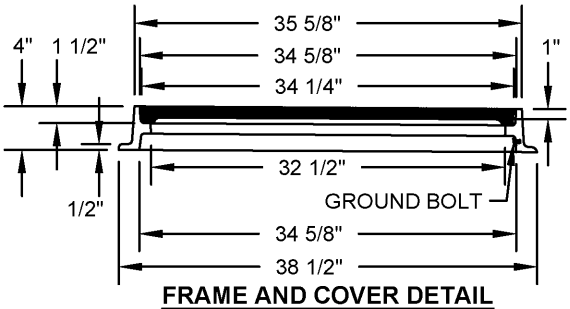

FRAME AND COVER DETAIL

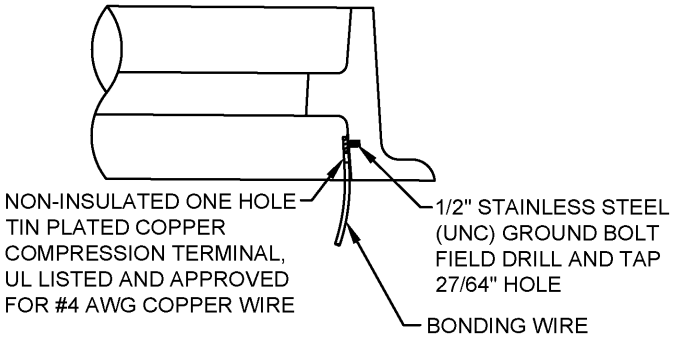

GROUND BOLT INSTALLATION DETAIL

PULL BOX
32"

CITY OF COLUMBUS, OHIO DEPARTMENT OF PUBLIC SERVICE DIVISION OF DESIGN AND CONSTRUCTION	STD DWG 4022
Hassan Zahran	5/01/2014
CITY ENGINEER	SHT 2 OF 3

NOTES:

ONE COAT OF WATER REPELLENT SEALER (SEE CITY OF COLUMBUS QUALIFIED PRODUCTS LIST) SHALL BE APPLIED TO THE INSIDE AND OUTSIDE OF THE PULL BOX.

CONCRETE SHALL HAVE AIR ENTRAPMENT OF 6% ± 2% AND SHALL HAVE 4500 PSI STRENGTH AT 28 DAYS. CONCRETE MATERIALS SHALL MEET ODOT SPECIFICATIONS. STANDARD PLACEMENT FOR WIRE MESH & REBAR SHALL BE USED.

LID RING LOAD TRANSFER IS TO BE DISTRIBUTED BY USE OF A PREFORMED MASTIC JOINT MATERIAL.

CUT OFF CONDUITS SO THEY EXTEND NO MORE THAN THREE INCHES BEYOND THE INSIDE PULL BOX WALL AND PROVIDE BUSHINGS.

WHENEVER POSSIBLE, CONDUITS SHOULD ENTER THE PULL BOX VIA A KNOCKOUT. WHEN APPROVED BY THE DIVISION OF DESIGN AND CONSTRUCTION PERSONNEL, CONDUITS MAY ENTER THE PULL BOX THROUGH ITS WALL ONLY IF THE OPENING IS SAWN OR CORE DRILLED.

THE WEDGE ANCHOR ASSEMBLY SHALL BE OMITTED WHENEVER THE ENTIRE AREA ABOVE THE KNOCKOUT (1/4 OF THE CASTING) IS EITHER ENCASED IN CONCRETE OR ASPHALT. THE ENCASEMENT SHALL BE CENTERED AROUND THE KNOCKOUT.

AFTER THE CONDUITS HAVE BEEN INSTALLED, ANY OPENING IN THE PULL BOX WALL SHALL BE TOTALLY FILLED WITH MORTAR OR CONCRETE AND FINISHED FLUSH WITH THE INSIDE PULL BOX WALL. (NO VOIDS)

PULL BOX BEARING CAPACITY TO EXCEED 40,000 POUNDS.

ENLARGING THE KNOCKOUT AREA IF REQUIRED SHALL BE DONE BY SAW CUTTING THE CONCRETE. NO OTHER METHOD IS ALLOWED. CONTRACTOR SHALL REPLACE THE CONCRETE HOUSING IF DAMAGED AT HIS EXPENSE.

ANY CONDUIT THAT EXITS A PULL BOX, CONTAINS CABLE AND DIRECTLY ENTERS ANY ELECTRONIC CABINET, SHALL BE DUCT SEALED IN THE PULL BOX.

THE CONTRACTOR SHALL INSTALL NON-ORGANIC FIBERGLASS PULL TAPE WITH A MINIMUM 1800 FT./LBS TENSION STRENGTH IN CONDUIT TO FACILITATE CABLE PLACEMENT.

ALL UNUSED CONDUITS SHALL BE CAPPED AND THE CAPS SECURED TO THE CONDUITS WITH TAPE.

PULL BOX
32"

CITY OF COLUMBUS, OHIO
DEPARTMENT OF PUBLIC SERVICE
DIVISION OF DESIGN AND CONSTRUCTION

STD DWG
4022

Hassan Zahran

5/01/2014

CITY ENGINEER

SHT 3 OF 3

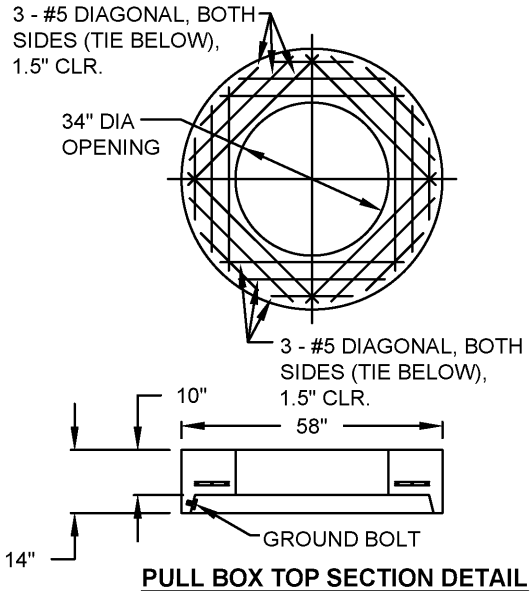

PULL BOX TOP SECTION DETAIL

THE CLIP SHALL BE MADE FROM A36 METAL, HD GALV (ASTM A123) AND IN THE SHAPE SHOWN.

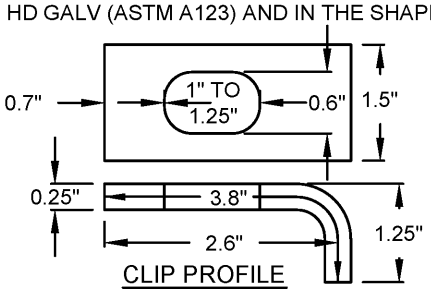

CLIP PROFILE
(NOM. VALUES)

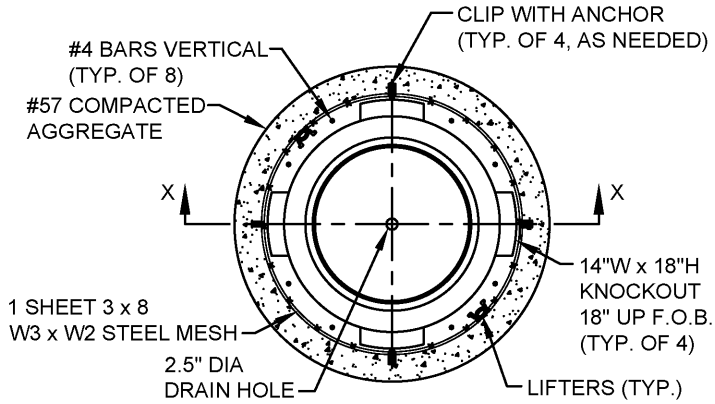

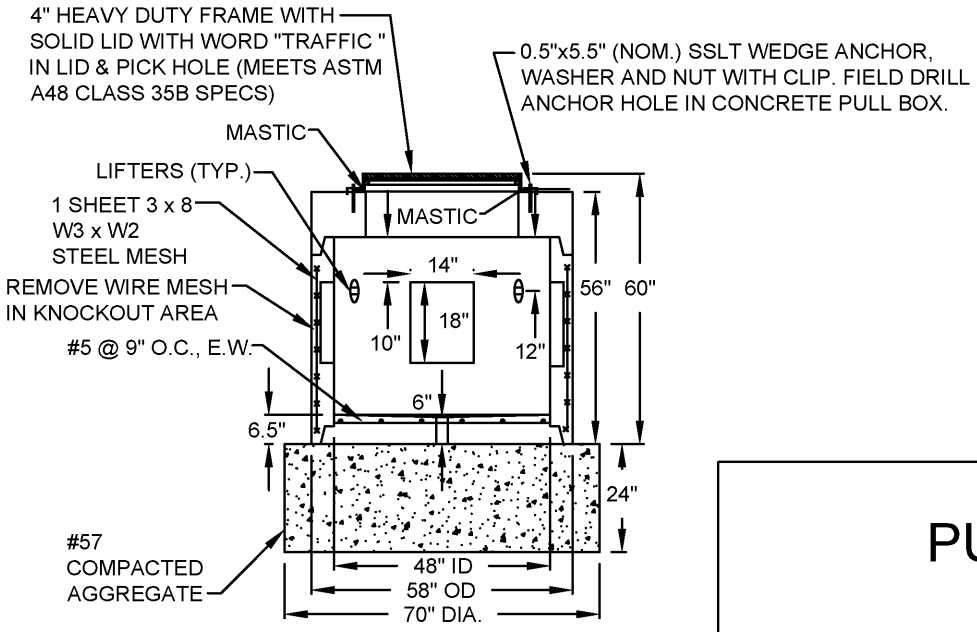

SECTION X-X
PULL BOX WITH FRAME AND LID
TYPE 1

TYPE 1

PULL BOX 48"

CITY OF COLUMBUS, OHIO
DEPARTMENT OF PUBLIC SERVICE
DIVISION OF DESIGN AND CONSTRUCTION

STD DWG
4023

5/01/2014

CITY ENGINEER

SHT 1 OF 4

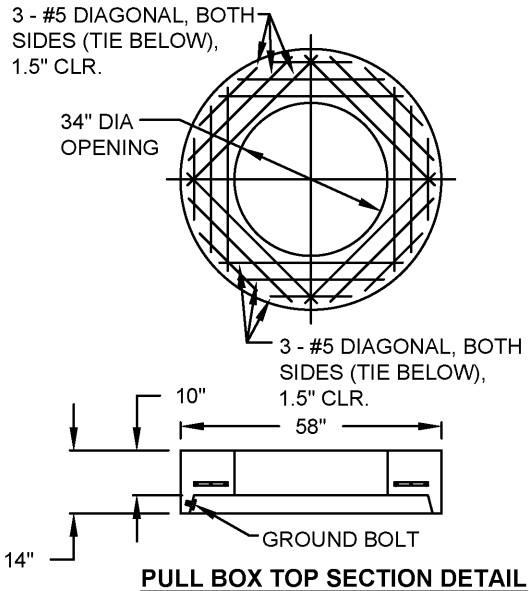

PULL BOX TOP SECTION DETAIL

THE CLIP SHALL BE MADE FROM A36 METAL, HD GALV (ASTM A123) AND IN THE SHAPE SHOWN.

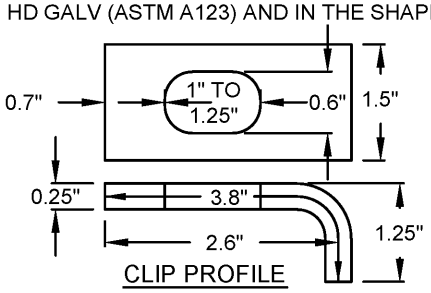

CLIP PROFILE
(NOM. VALUES)

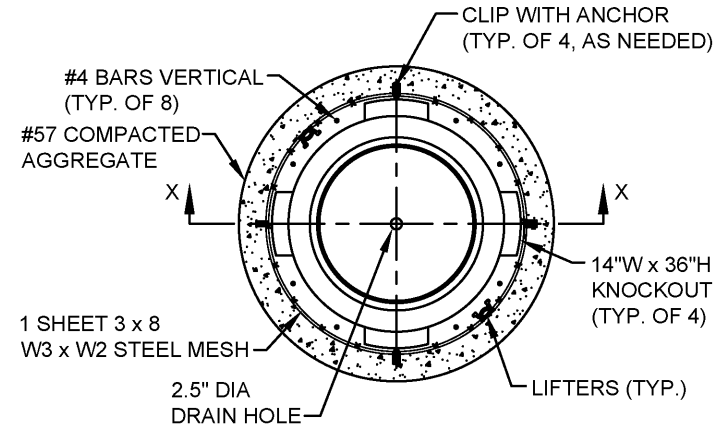

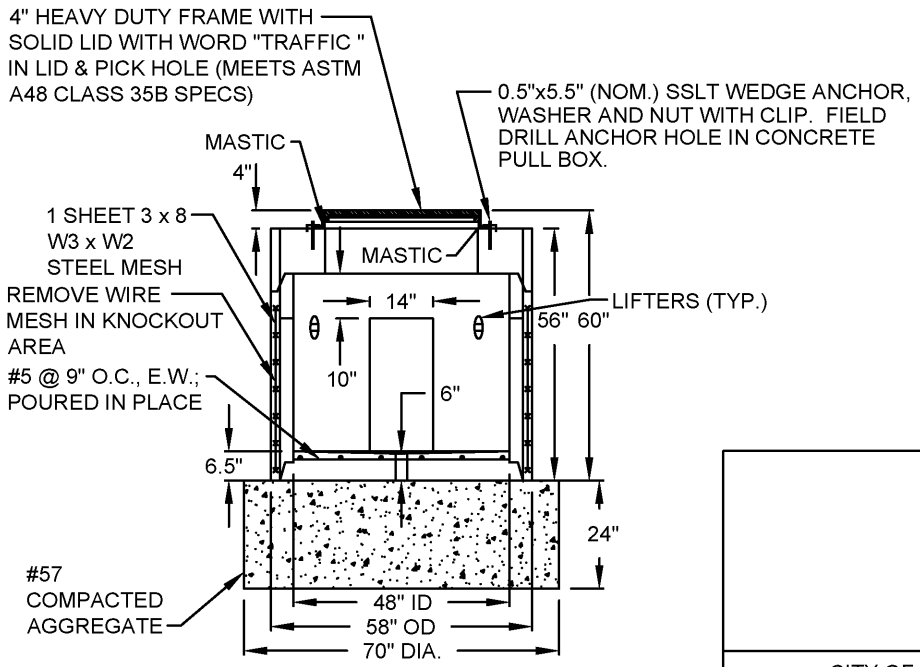

SECTION X-X
PULL BOX WITH FRAME AND LID
TYPE 2*

*USE WHEN PLACING PULL BOX OVER EXISTING CONDUITS

TYPE 2

PULL BOX 48"

CITY OF COLUMBUS, OHIO
DEPARTMENT OF PUBLIC SERVICE
DIVISION OF DESIGN AND CONSTRUCTION

STD DWG
4023

5/01/2014

CITY ENGINEER

SHT 2 OF 4

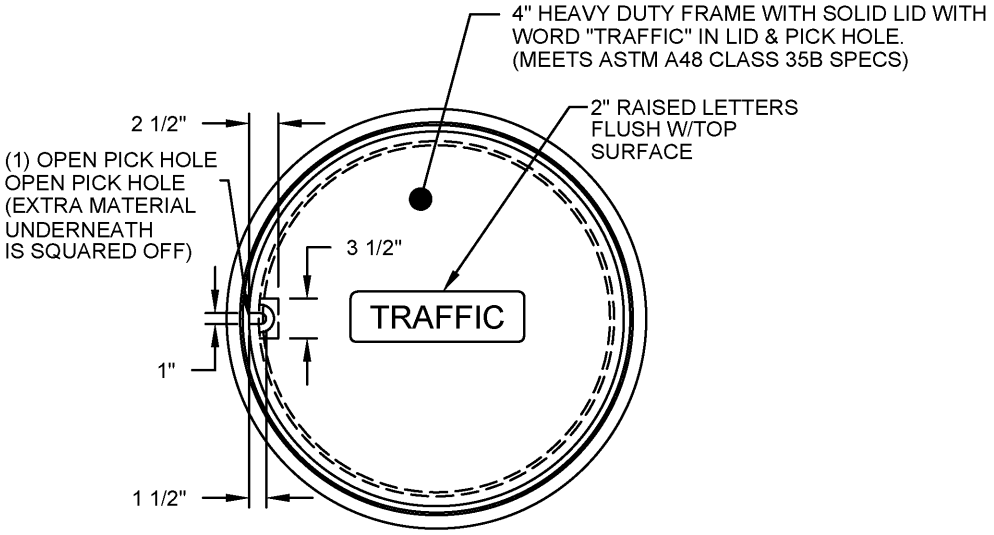

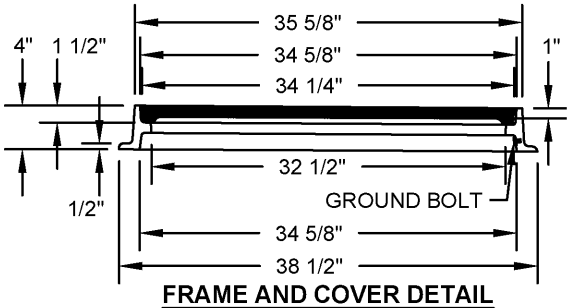

FRAME AND COVER DETAIL

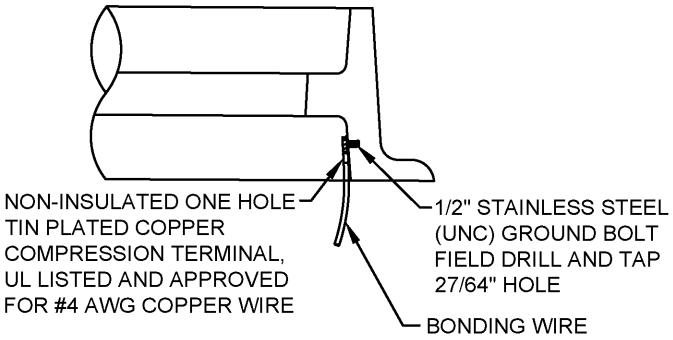

GROUND BOLT INSTALLATION DETAIL

PULL BOX
48"

CITY OF COLUMBUS, OHIO DEPARTMENT OF PUBLIC SERVICE DIVISION OF DESIGN AND CONSTRUCTION	STD DWG 4023
Hassan Zahran	5/01/2014
CITY ENGINEER	SHT 3 OF 4

NOTES:

ONE COAT OF WATER REPELLENT SEALER (SEE CITY OF COLUMBUS QUALIFIED PRODUCTS LIST) SHALL BE APPLIED TO THE INSIDE AND OUTSIDE OF THE PULL BOX.

CONCRETE SHALL HAVE AIR ENTRAPMENT OF 6% ± 2% AND SHALL HAVE 4500 PSI STRENGTH AT 28 DAYS. CONCRETE MATERIALS SHALL MEET ODOT SPECIFICATIONS.

LID RING LOAD TRANSFER IS TO BE DISTRIBUTED BY USE OF A PREFORMED MASTIC JOINT MATERIAL.

CUT OFF CONDUITS SO THEY EXTEND NO MORE THAN THREE INCHES BEYOND THE PULL BOX WALL AND PROVIDE BUSHINGS

WHENEVER POSSIBLE, CONDUITS SHOULD ENTER THE PULL BOX VIA A KNOCKOUT. WHEN APPROVED BY THE DIVISION OF DESIGN AND CONSTRUCTION PERSONNEL, CONDUITS MAY ENTER THE PULL BOX THROUGH ITS WALL ONLY IF THE OPENING IS SAWN OR CORE DRILLED.

THE WEDGE ANCHOR ASSEMBLY SHALL BE OMITTED WHENEVER THE ENTIRE AREA ABOVE THE KNOCKOUT (1/4 OF THE CASTING) IS ENCASED IN EITHER CONCRETE OR ASPHALT. THE ENCASEMENT SHALL BE CENTERED AROUND THE KNOCKOUT.

AFTER THE CONDUITS HAVE BEEN INSTALLED, ANY OPENING IN THE PULL BOX WALL SHALL BE TOTALLY FILLED WITH MORTAR OR CONCRETE AND FINISHED FLUSH WITH THE INSIDE PULL BOX WALL (NO VOIDS).

PULL BOX BEARING CAPACITY TO EXCEED 40,000 POUNDS.

ENLARGING THE KNOCKOUT AREA, IF REQUIRED, SHALL BE DONE BY SAW CUTTING THE CONCRETE. NO OTHER METHOD IS ALLOWED. THE CONTRACTOR SHALL REPLACE THE CONCRETE HOUSING, IF DAMAGED, AT THEIR EXPENSE.

ANY CONDUIT THAT EXITS A PULL BOX, CONTAINS CABLE AND DIRECTLY ENTERS ANY ELECTRONICS CABINET, SHALL BE DUCT-SEALED IN THE PULL BOX.

THE CONTRACTOR SHALL INSTALL NON-ORGANIC FIBERGLASS PULL TAPE WITH A MINIMUM 1800 FT./LBS TENSION STRENGTH IN CONDUIT TO FACILITATE CABLE PLACEMENT.

ALL UNUSED CONDUITS SHALL BE CAPPED AND THE CAPS SECURED TO THE CONDUITS WITH TAPE.

STANDARD PLACEMENT FOR WIRE MESH AND REBAR SHALL BE USED.

PULL BOX
48"

CITY OF COLUMBUS, OHIO DEPARTMENT OF PUBLIC SERVICE DIVISION OF DESIGN AND CONSTRUCTION	STD DWG 4023
Hassan Zahran	5/01/2014
CITY ENGINEER	SHT 4 OF 4

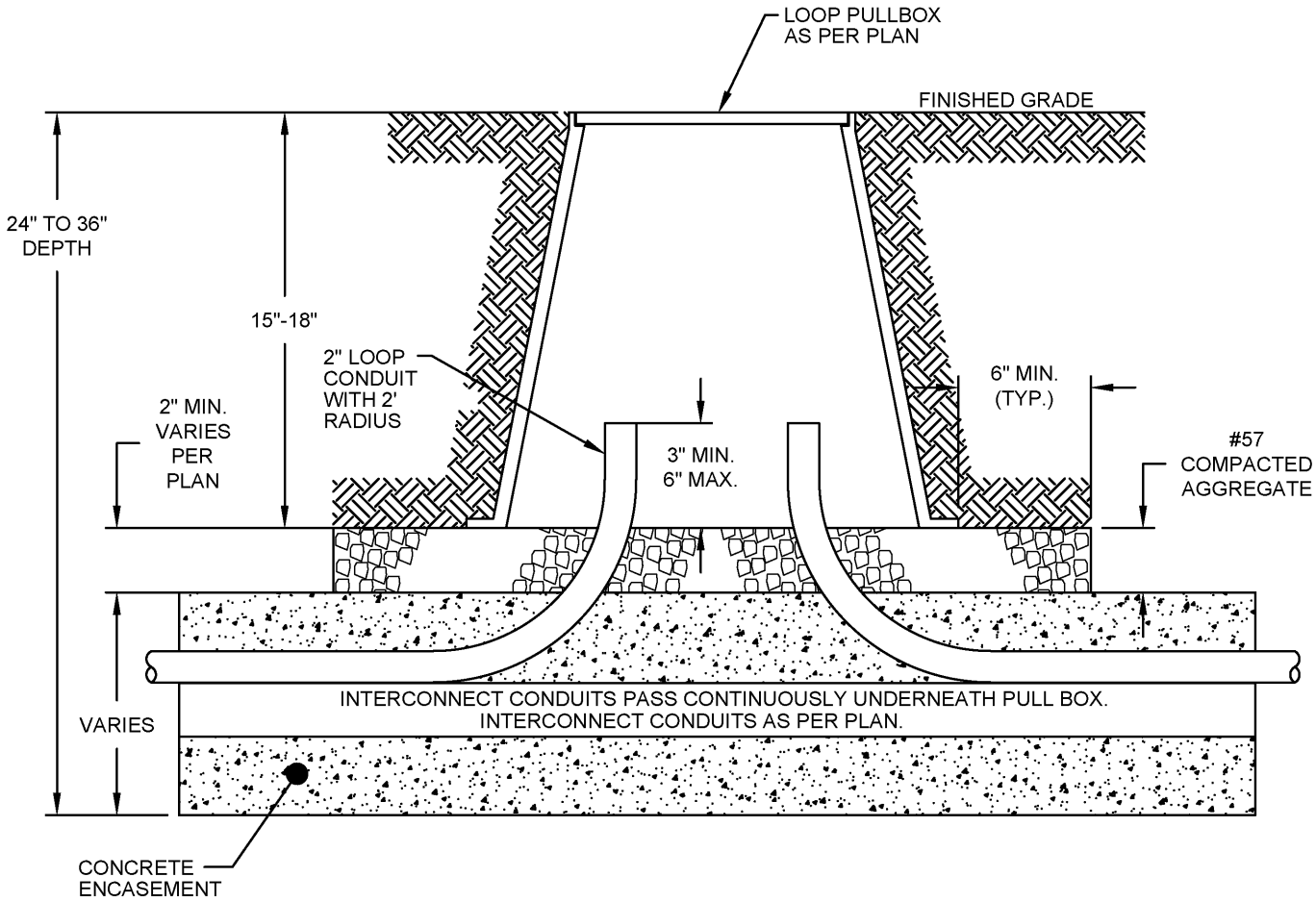

LOOP PULL BOX INSTALLED OVER INTERCONNECT CONDUIT BANK

CITY OF COLUMBUS, OHIO DEPARTMENT OF PUBLIC SERVICE DIVISION OF DESIGN AND CONSTRUCTION	STD DWG 4024
Hassan Zahran	5/01/2014
CITY ENGINEER	SHT 1 OF 1

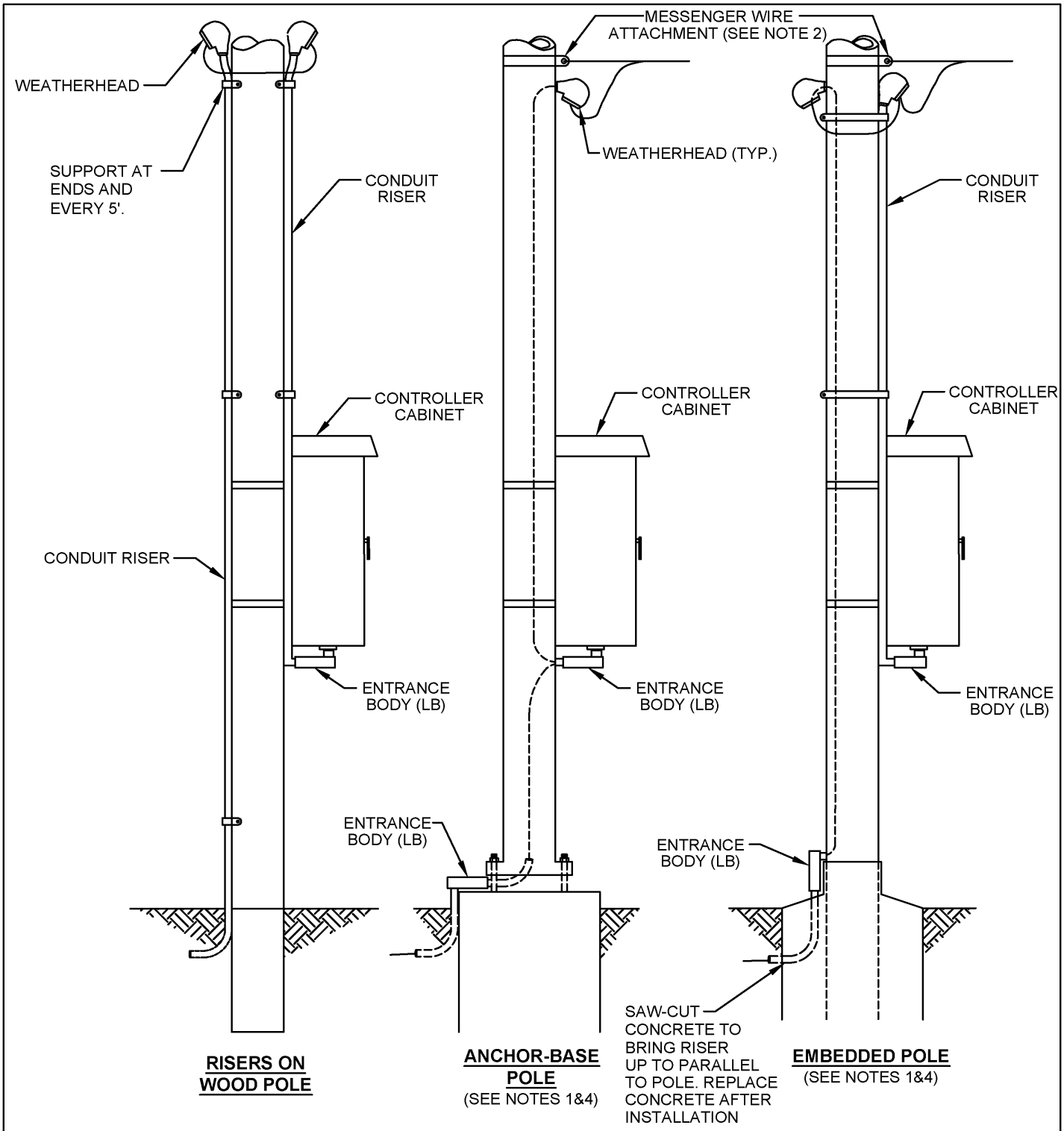

NOTES:

1. CONDUIT ENTRY AT BASE OF POLE SHOWN IN ANCHOR BASE AND EMBEDDED APPLICATIONS SHALL ONLY BE PERMITTED IF SPECIFIED IN THE CONSTRUCTION PLANS.
2. SEE MESSENGER WIRE DETAILS ON CITY OF COLUMBUS STANDARD DRAWINGS 4330 AND 4331.
3. THESE ARE NOT APPLICABLE FOR POWER SERVICE. SEE CITY OF COLUMBUS STANDARD DRAWING 4052 FOR DETAILS.
4. EXISTING POLE ONLY WITH PRIOR APPROVAL FOR RETRO FIT APPLICATIONS.

SIGNAL CABLE CONDUIT RISER INSTALLATION

CITY OF COLUMBUS, OHIO
DEPARTMENT OF PUBLIC SERVICE
DIVISION OF DESIGN AND CONSTRUCTION

STD DWG
4050

5/01/2014

CITY ENGINEER

SHT 1 OF 1

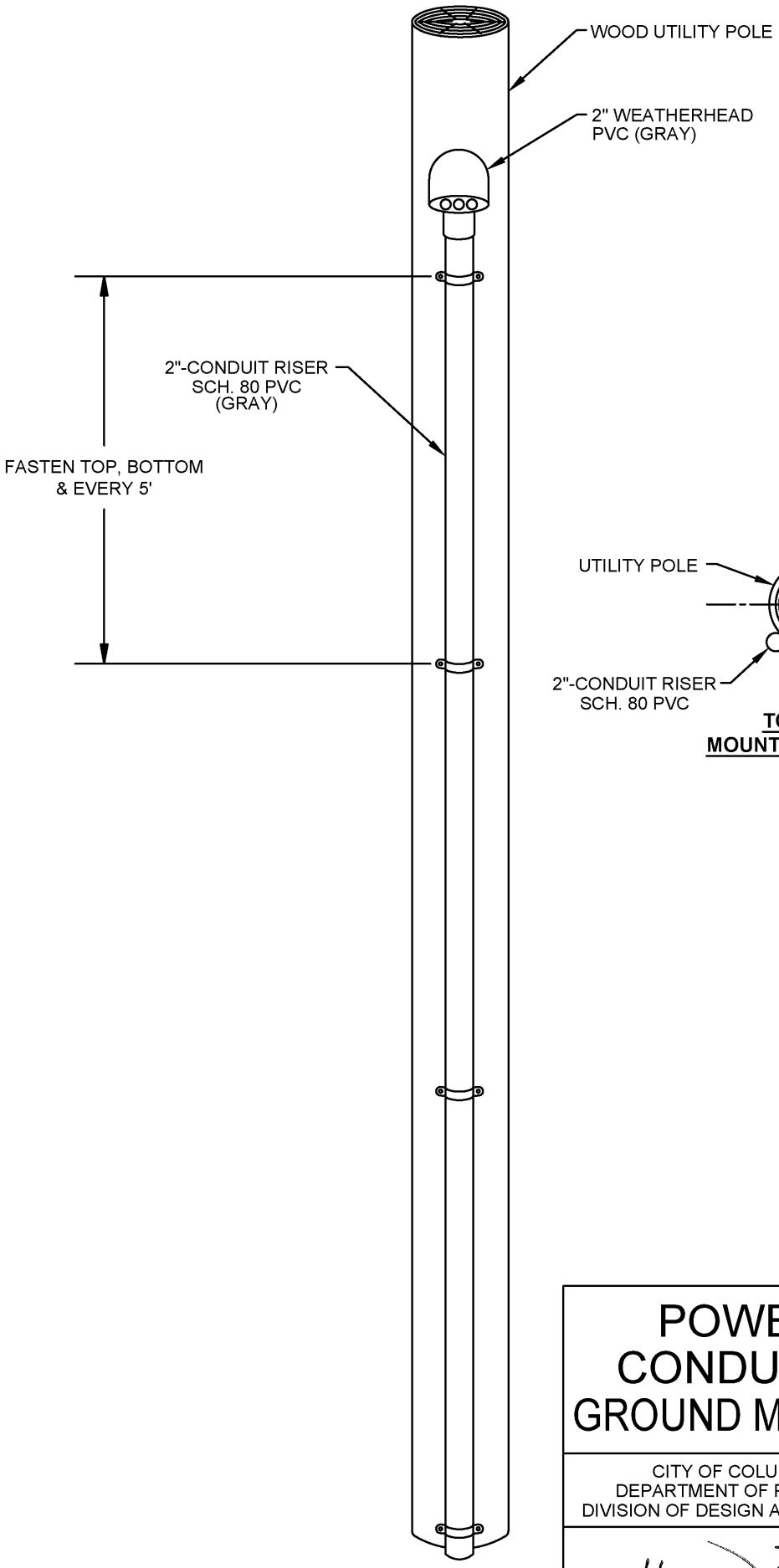

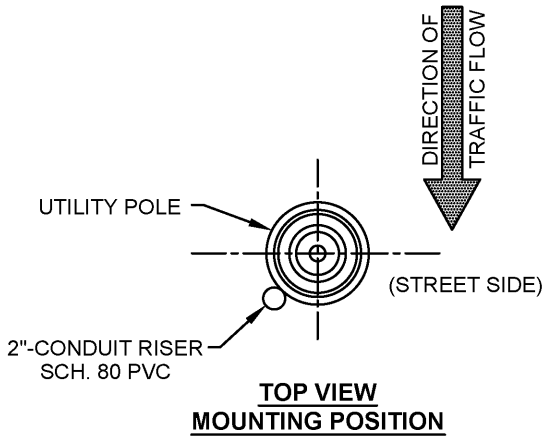

TOP VIEW
MOUNTING POSITION

POWER SERVICE CONDUIT RISER FOR GROUND MOUNTED CABINET

CITY OF COLUMBUS, OHIO DEPARTMENT OF PUBLIC SERVICE DIVISION OF DESIGN AND CONSTRUCTION	STD DWG 4051
Hassan Zahra	5/01/2014
CITY ENGINEER	SHT 1 OF 1

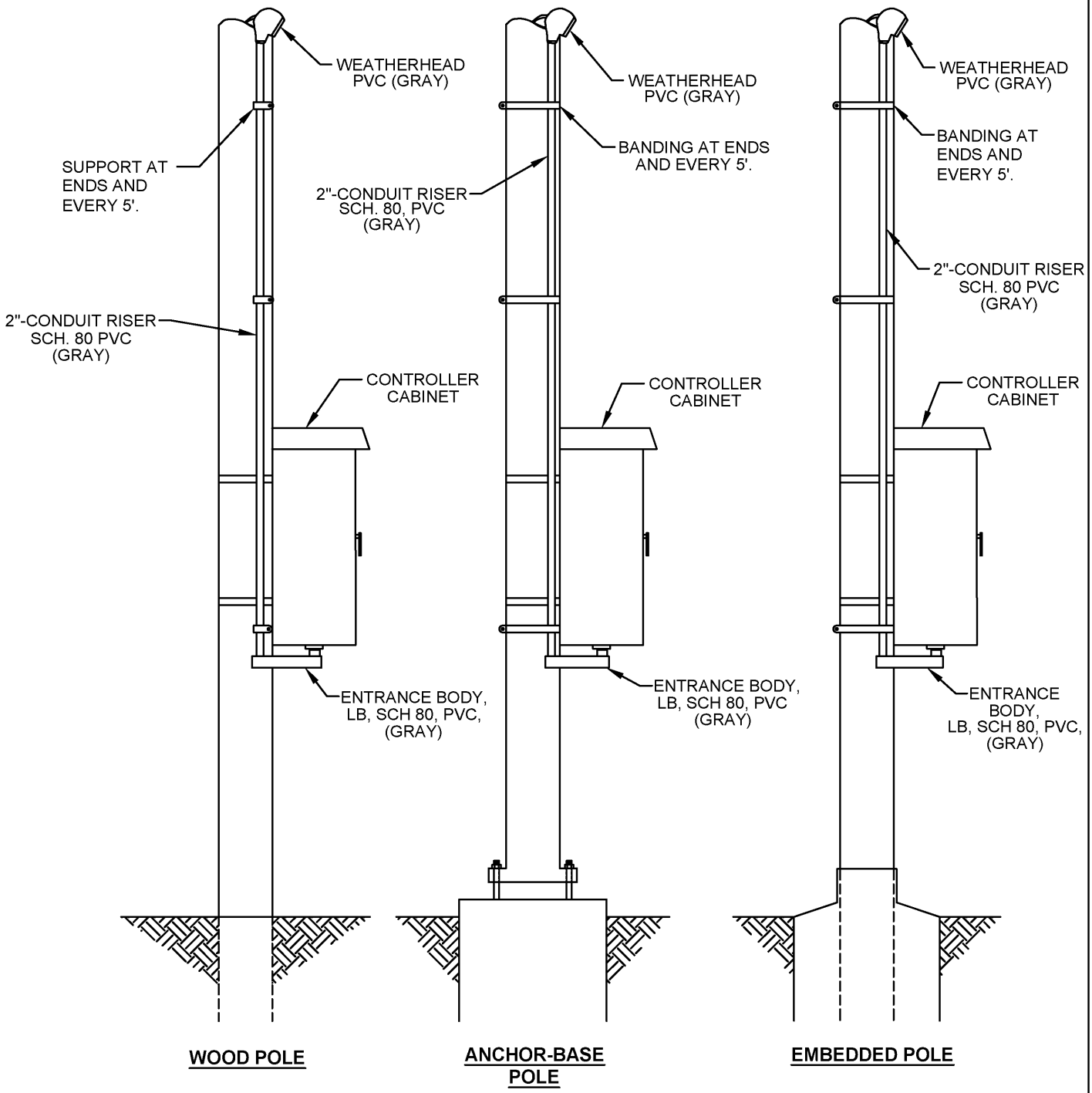

POWER SERVICE CONDUIT RISER FOR POLE MOUNTED CABINET

CITY OF COLUMBUS, OHIO DEPARTMENT OF PUBLIC SERVICE DIVISION OF DESIGN AND CONSTRUCTION	STD DWG 4052
Hassan Zahran	5/01/2014
CITY ENGINEER	SHT 1 OF 1

ANCHOR BOLT PATTERN

ANCHOR BOLT PROJECTS 2.75" ABOVE BASE

(4) 3/4" x 40"-8 NC GALV STEEL
ANCHOR BOLTS, ASTM A576, 50k PSI
MINIMUM YIELD, TOP 10" GALV PER
ASTM A153, "L" SHAPED (4"L)
(4) 8 NC GALV STEEL HEX NUTS
(4) GALV STEEL LOCKWASHERS

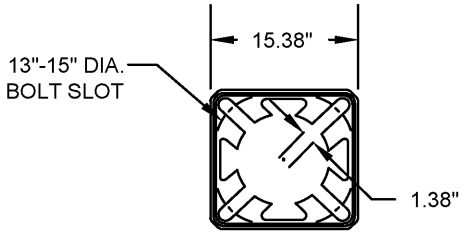

PLATE PEDESTAL BASE

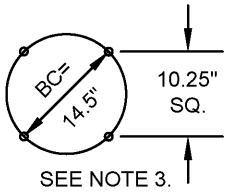

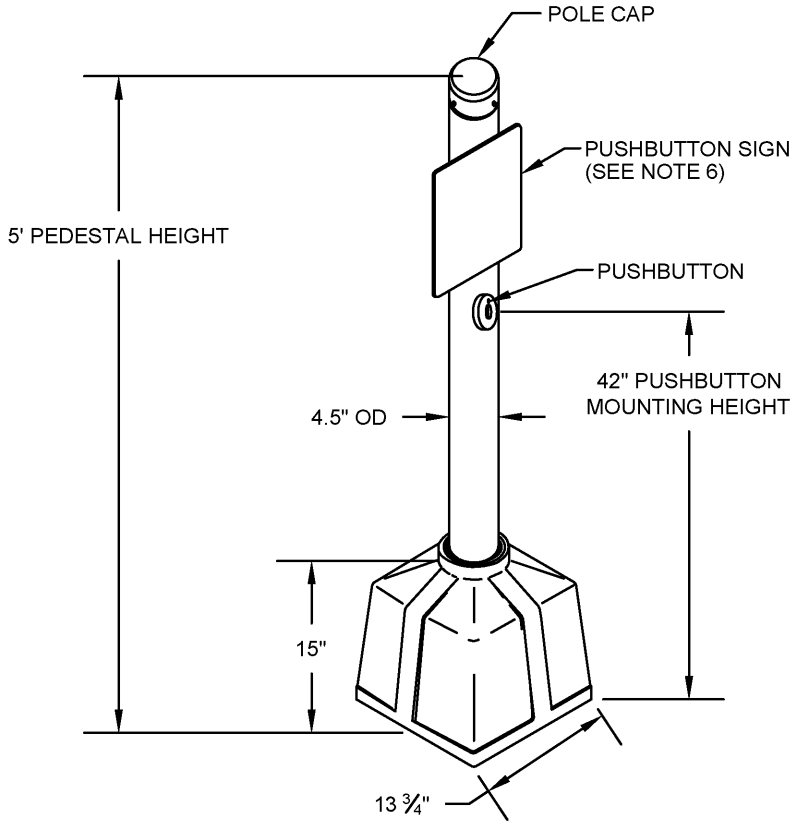

NOTES:

1. PEDESTAL SUPPORTS SHALL BE COATED IN ACCORDANCE WITH THE PLANS.
2. THE POLE SHAFT SHALL BE 46.75" WITH A DIAMETER OF 4" NPT (4.5" OD, SCH 40), & SHALL BE THREADED FOR INSERTION INTO THE BASE.
3. THE 5 FT. STRUCTURE HEIGHT ENCOMPASSES THE BASE HEIGHT PLUS THE INSERTED POLE SHAFT HEIGHT.
4. THE PUSHBUTTON STRUCTURE SHALL BE ALL ALUMINUM.
5. FOR FOUNDATION DETAILS SEE CITY OF COLUMBUS STANDARD DRAWING 4163.
6. FOR PUSHBUTTON SIGN DETAILS, SEE CITY OF COLUMBUS STANDARD DRAWING 4230.

5' PEDESTAL PUSHBUTTON MOUNTING

CITY OF COLUMBUS, OHIO
DEPARTMENT OF PUBLIC SERVICE
DIVISION OF DESIGN AND CONSTRUCTION

STD DWG
4100

5/01/2014

CITY ENGINEER

SHT 1 OF 1

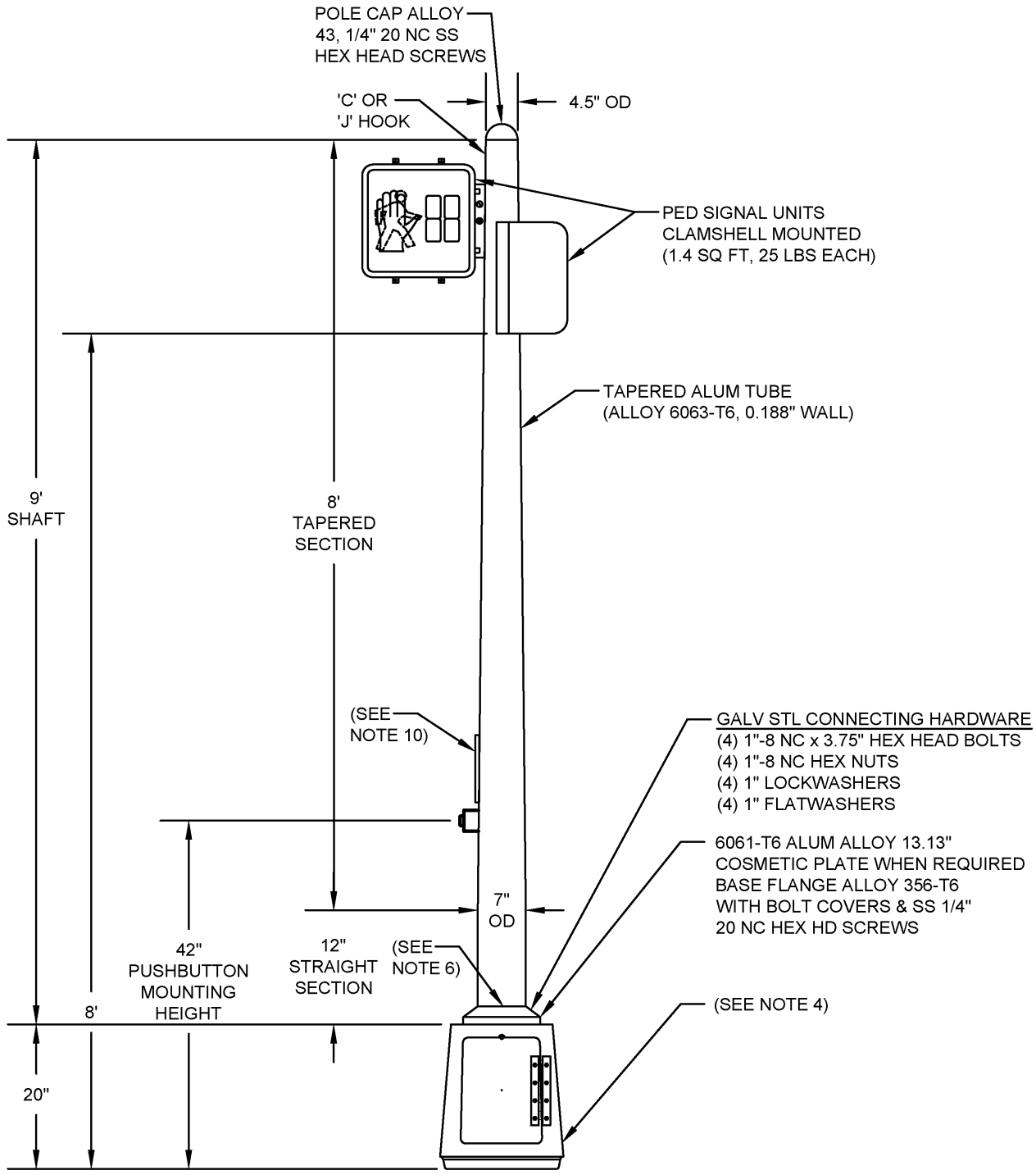

ANCHOR BOLT PROJECTS 2.75" ABOVE BASE

(4) 3/4" x 40"-8 NC GALV STEEL
ANCHOR BOLTS, ASTM A576, 50k PSI
MINIMUM YIELD, TOP 10" GALV PER
ASTM A153, "L" SHAPED (4"L)
(4) 8 NC GALV STEEL HEX NUTS
(4) GALV STEEL LOCKWASHERS

ANCHOR BOLT PATTERN

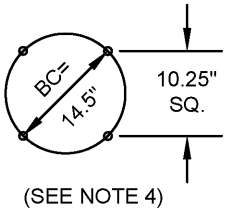

10.7' PEDESTAL PEDESTRIAN SIGNAL HEAD MOUNTING

CITY OF COLUMBUS, OHIO
DEPARTMENT OF PUBLIC SERVICE
DIVISION OF DESIGN AND CONSTRUCTION

Hassan Zahran

CITY ENGINEER

STD DWG
4101

5/01/2014

SHT 1 OF 2

NOTES:

1. PEDESTAL SUPPORTS SHALL BE COATED IN ACCORDANCE WITH THE PLANS.

2. PEDESTAL SUPPORTS SHALL BE DESIGNED FOR 90 MPH WINDS, APPROPRIATE GUST FACTOR AND LOADING AS PER PLAN.

3. 4 ANCHOR BOLTS SHALL BE INCLUDED WITH NUTS, LOCK WASHERS AND EIGHT (8) SHIMS.

4. A 20" TRANSFORMER BASE (ALSO KNOWN AS T-BASE) AND ALL CONNECTING HARDWARE SHALL BE FURNISHED WITH EACH PEDESTAL. FOR TRANSFORMER BASE DETAILS SEE CITY OF COLUMBUS STANDARD CONSTRUCTION DRAWING 4105.

5. THE PEDESTAL SHALL BE FURNISHED AND INSTALLED WITH A POLE SHAFT THAT HAS A COMBINED TAPERED-STRAIGHT CROSS-SECTIONAL DESIGN AND A ONE-PIECE CONSTRUCTION WITH NO LONGITUDINAL OR CIRCUMFERENTIAL WELDS EXCEPT FOR THE WELD NEEDED TO ATTACH THE POLE BASE. THE POLE SHAFT SHALL HAVE A ROUND CROSS-SECTIONAL DESIGN.

6. THE POLE BASE SHALL TELESCOPE THE POLE SHAFT. THE BASE SHALL BE WELDED TO THE POLE SHAFT BY 2 CIRCUMFERENTIAL WELDS: ONE ON THE OUTSIDE OF THE POLE AT THE BASE TOP AND ONE ON THE INSIDE OF THE BASE AT THE POLE BOTTOM.

7. 4 BOLT COVERS AND A POLE CAP SHALL BE FURNISHED AND INSTALLED WITH EACH PEDESTAL. THE POLE BASE PLATE SHALL BE LARGE ENOUGH TO FIT OVER ALL OF THE T-BASE TOP OPENINGS. USING AN ALUMINUM FILLER PLATE ON TOP OF THE T-BASE TO COVER ANY OPENING IS ACCEPTABLE. THE FILLER PLATE SHALL BE MANUFACTURED TO FIT THE T-BASE TOP EXACTLY AND BE AT LEAST 1/8 INCH THICK AND MADE FROM 5052-H32 ALLOY. BOTH SIDES AND THE EDGES OF THE FILLER PLATE SHALL BE COATED TO MATCH THE POLE AND T-BASE.

8. FOR FOUNDATION DETAILS SEE CITY OF COLUMBUS STANDARD CONSTRUCTION DRAWING 4163.

9. THE PEDESTRIAN SIGNAL HEAD HOUSING AND CLAM SHELL MOUNTING BRACKETS SHALL BE BLACK MATCHING FEDERAL STANDARD 595B, COLOR # 27038.

10. FOR PEDESTRIAN PUSHBUTTON SIGN DETAILS SEE CITY OF COLUMBUS STANDARD CONSTRUCTION DRAWING 4230.

10.7' PEDESTAL PEDESTRIAN SIGNAL HEAD MOUNTING

CITY OF COLUMBUS, OHIO
DEPARTMENT OF PUBLIC SERVICE
DIVISION OF DESIGN AND CONSTRUCTION

STD DWG
4101

5/01/2014

Hassan Zahran

CITY ENGINEER

SHT 2 OF 2

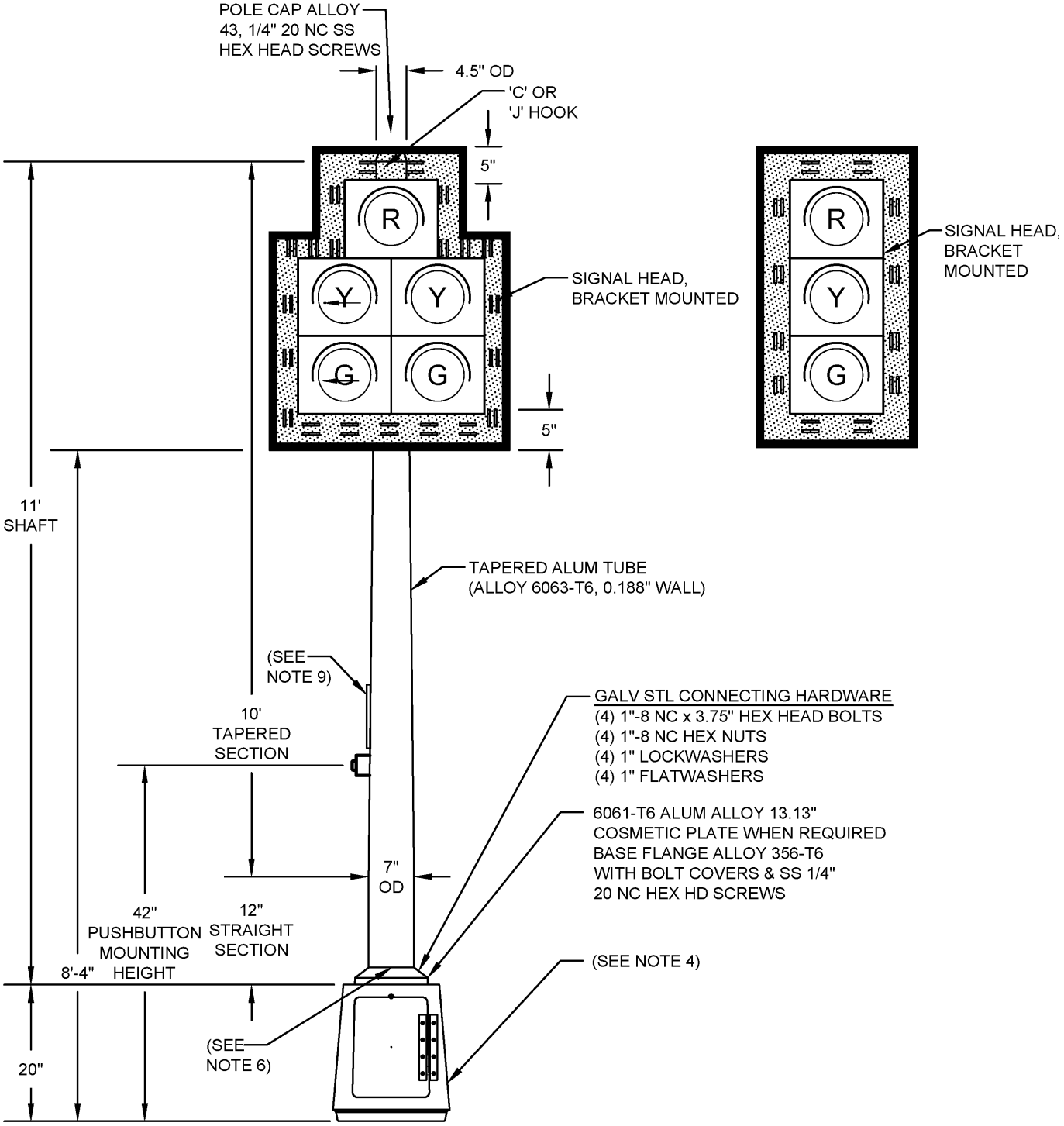

ANCHOR BOLT PROJECTS 2.75" ABOVE BASE

(4) 3/4" x 40"-8 NC GALV STEEL
ANCHOR BOLTS, ASTM A576, 50k PSI
MINIMUM YIELD, TOP 10" GALV PER
ASTM A153, "L" SHAPED (4"L)
(4) 8 NC GALV STEEL HEX NUTS
(4) GALV STEEL LOCKWASHERS

ANCHOR BOLT PATTERN

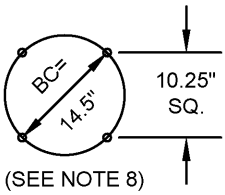

12.7' PEDESTAL VEHICULAR SIGNAL HEAD MOUNTING

CITY OF COLUMBUS, OHIO
DEPARTMENT OF PUBLIC SERVICE
DIVISION OF DESIGN AND CONSTRUCTION

STD DWG
4102

5/01/2014

CITY ENGINEER

SHT 1 OF 2

NOTES:

1. PEDESTAL SUPPORTS SHALL BE COATED IN ACCORDANCE WITH THE PLANS.

2. PEDESTAL SUPPORTS SHALL BE DESIGNED FOR 90 MPH WINDS, APPROPRIATE GUST FACTOR AND LOADING AS PER PLAN.

3. 4 ANCHOR BOLTS SHALL BE INCLUDED WITH NUTS, LOCK WASHERS AND EIGHT (8) SHIMS.

4. A 20" TRANSFORMER BASE (ALSO KNOWN AS T-BASE) AND ALL CONNECTING HARDWARE SHALL BE FURNISHED WITH EACH PEDESTAL. FOR TRANSFORMER BASE DETAILS SEE CITY OF COLUMBUS STANDARD CONSTRUCTION DRAWING 4105.

5. THE PEDESTAL SHALL BE FURNISHED AND INSTALLED WITH A POLE SHAFT THAT HAS A COMBINED TAPERED-STRAIGHT CROSS-SECTIONAL DESIGN AND A ONE-PIECE CONSTRUCTION WITH NO LONGITUDINAL OR CIRCUMFERENTIAL WELDS EXCEPT FOR THE WELD NEEDED TO ATTACH THE POLE BASE. THE POLE SHAFT SHALL HAVE A ROUND CROSS-SECTIONAL DESIGN.

6. THE POLE BASE SHALL TELESCOPE THE POLE SHAFT. THE BASE SHALL BE WELDED TO THE POLE SHAFT BY 2 CIRCUMFERENTIAL WELDS: ONE ON THE OUTSIDE OF THE POLE AT THE BASE TOP AND ONE ON THE INSIDE OF THE BASE AT THE POLE BOTTOM.

7. 4 BOLT COVERS AND A POLE CAP SHALL BE FURNISHED AND INSTALLED WITH EACH PEDESTAL. THE POLE BASE PLATE SHALL BE LARGE ENOUGH TO FIT OVER ALL OF THE T-BASE TOP OPENINGS. USING AN ALUMINUM FILLER PLATE ON TOP OF THE T-BASE TO COVER ANY OPENING IS ACCEPTABLE. THE FILLER PLATE SHALL BE MANUFACTURED TO FIT THE T-BASE TOP EXACTLY AND BE AT LEAST 1/8 INCH THICK AND MADE FROM 5052-H32 ALLOY. BOTH SIDES AND THE EDGES OF THE FILLER PLATE SHALL BE COATED TO MATCH THE POLE AND T-BASE..

8. FOR FOUNDATION DETAILS SEE CITY OF COLUMBUS STANDARD CONSTRUCTION DRAWING 4163.

9. FOR PEDESTRIAN PUSHBUTTON SIGN DETAILS SEE CITY OF COLUMBUS STANDARD CONSTRUCTION DRAWING 4230.

12.7' PEDESTAL & VEHICULAR SIGNAL HEAD MOUNTING STANDARD	
CITY OF COLUMBUS, OHIO DEPARTMENT OF PUBLIC SERVICE DIVISION OF DESIGN AND CONSTRUCTION	STD DWG 4102
Hassan Zahran	5/01/2014
CITY ENGINEER	SHT 2 OF 2

ANCHOR BOLT PROJECTS 2.75" ABOVE BASE

(4) 3/4" x 40"-8 NC GALV STEEL ANCHOR BOLTS, ASTM A576, 50k PSI MINIMUM YIELD, TOP 10" GALV PER ASTM A153, "L" SHAPED (4"L)
(4) 8 NC GALV STEEL HEX NUTS
(4) GALV STEEL LOCKWASHERS

ANCHOR BOLT PATTERN

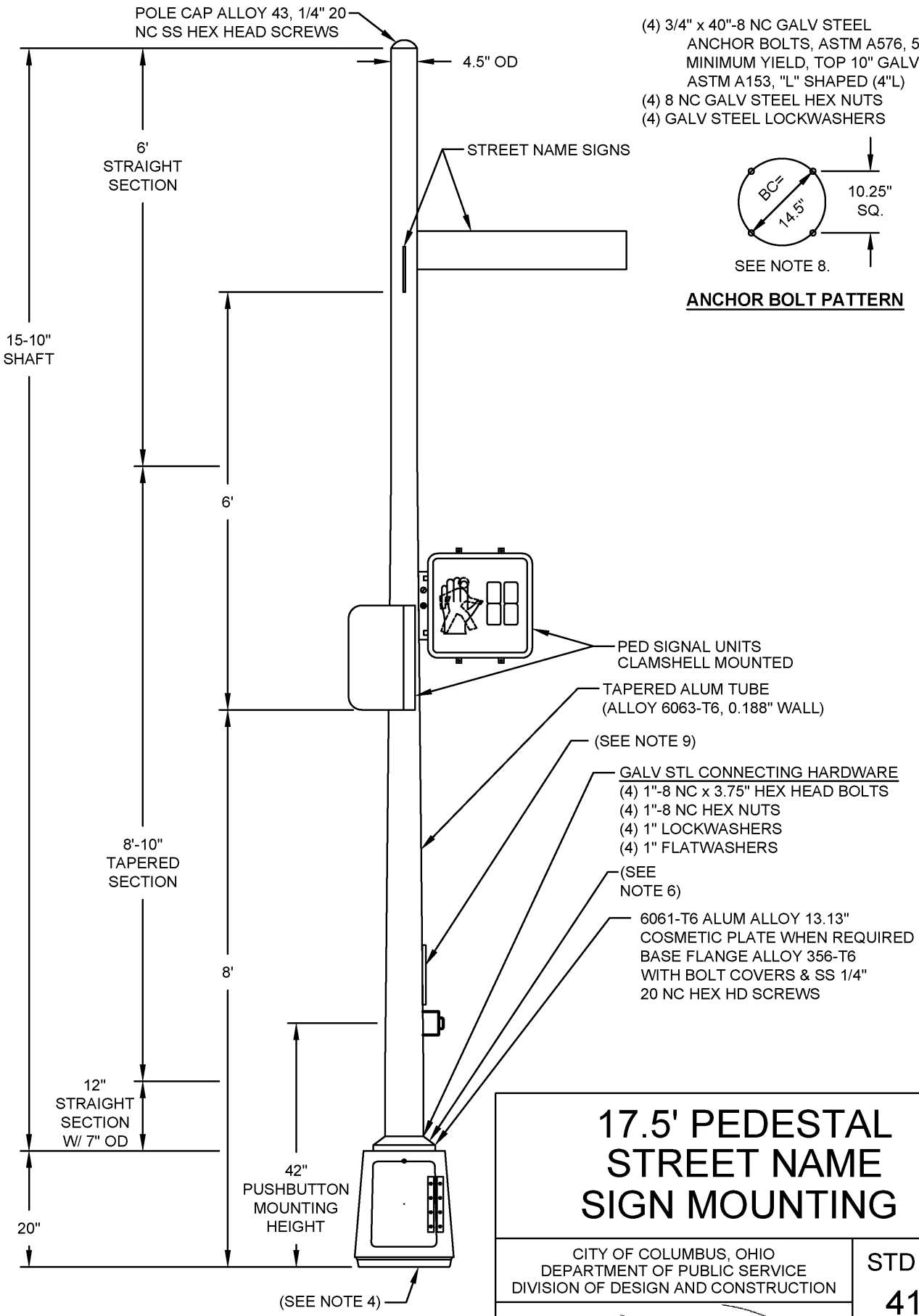

17.5' PEDESTAL STREET NAME SIGN MOUNTING

CITY OF COLUMBUS, OHIO
DEPARTMENT OF PUBLIC SERVICE
DIVISION OF DESIGN AND CONSTRUCTION

STD DWG
4103

5/01/2014

CITY ENGINEER

SHT 1 OF 2

NOTES:

1. PEDESTAL SUPPORTS SHALL BE COATED IN ACCORDANCE WITH THE PLAN.

2. PEDESTAL SUPPORTS SHALL BE DESIGNED FOR 90 MPH WINDS, APPROPRIATE GUST FACTOR AND LOADING AS PER PLAN.

3. 4 ANCHOR BOLTS SHALL BE INCLUDED WITH NUTS, LOCK WASHERS AND EIGHT (8) SHIMS.

4. A 20" TRANSFORMER BASE (ALSO KNOWN AS T-BASE) AND ALL CONNECTING HARDWARE SHALL BE FURNISHED WITH EACH PEDESTAL. FOR TRANSFORMER BASE DETAILS SEE CITY OF COLUMBUS STANDARD CONSTRUCTION DRAWING 4109.

5. THE PEDESTAL SHALL BE FURNISED AND INSTALLED WITH A POLE SHAFT THAT HAS A COMBINED TAPERED-STRAIGHT CROSS-SECTIONAL DESIGN AND A ONE-PIECE CONSTRUCTION WITH NO LONGITUDINAL OR CIRCUMFERENTIAL WELDS EXCEPT FOR THE WELD NEEDED TO ATTACH THE POLE BASE. THE POLE SHAFT SHALL HAVE A ROUND CROSS-SECTIONAL DESIGN.

6. THE POLE BASE SHALL TELESCOPE THE POLE SHAFT. THE BASE SHALL BE WELDED TO THE POLE SHAFT BY 2 CIRCUMFERENTIAL WELDS: ONE ON THE OUTSIDE OF THE POLE AT THE BASE TOP AND ONE ON THE INSIDE OF THE BASE AT THE POLE BOTTOM.

7. 4 BOLT COVERS AND A POLE CAP SHALL BE FURNISHED AND INSTALLED WITH EACH PEDESTAL. THE POLE BASE PLATE SHALL BE LARGE ENOUGH TO FIT OVER ALL OF THE T-BASE TOP OPENINGS. USING AN ALUMINUM FILLER PLATE ON TOP OF THE T-BASE TO COVER ANY OPENING IS ACCEPTABLE. THE FILLER PLATE SHALL BE MANUFACTURED TO FIT THE T-BASE TOP EXACTLY AND BE AT LEAST 1/8" THICK AND MADE FROM 5052-H32 ALLOY. BOTH SIDES AND THE EDGES OF THE FILLER PLATE SHALL BE COATED TO MATCH THE POLE AND T-BASE.

8. FOR FOUNDATION DETAILS SEE CITY OF COLUMBUS STANDARD DRAWING 4163.

9. FOR PEDESTRIAN PUSHBUTTON SIGN DETAILS SEE CITY OF COLUMBUS STANDARD CONSTRUCTION DRAWING 4230.

17.5' PEDESTAL STREET NAME SIGN MOUNTING

CITY OF COLUMBUS, OHIO DEPARTMENT OF PUBLIC SERVICE DIVISION OF DESIGN AND CONSTRUCTION	STD DWG 4103
Hassan Zahran	5/01/2014
CITY ENGINEER	SHT 2 OF 2

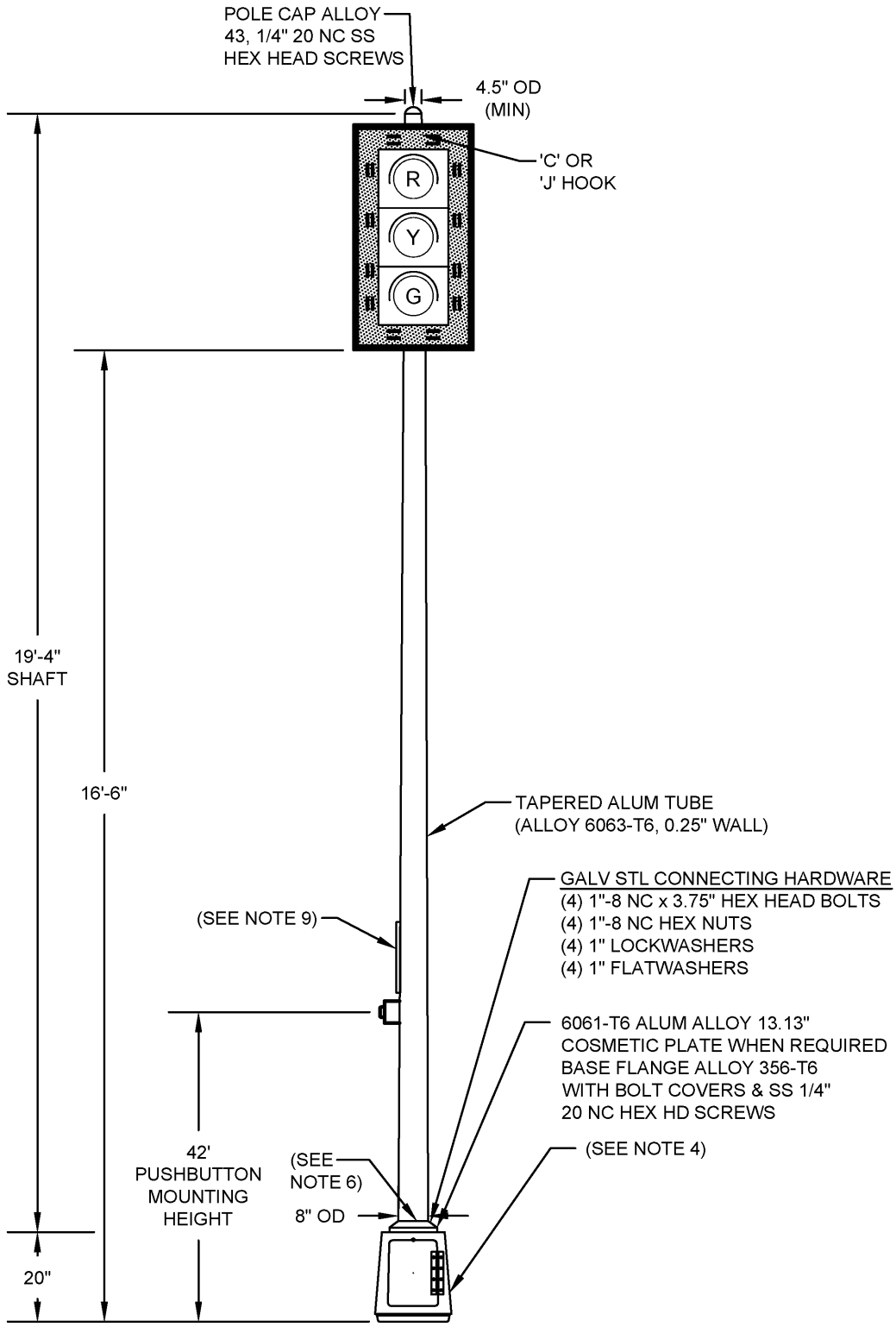

ANCHOR BOLT PROJECTS 2.75" ABOVE BASE

(4) 3/4" x 40"-8 NC GALV STEEL
ANCHOR BOLTS, ASTM A576, 50k PSI
MINIMUM YIELD, TOP 10" GALV PER
ASTM A153, "L" SHAPED (4"L)
(4) 8 NC GALV STEEL HEX NUTS
(4) GALV STEEL LOCKWASHERS

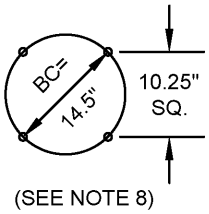

ANCHOR BOLT PATTERN

21' PEDESTAL & VEHICULAR SIGNAL HEAD MOUNTING

CITY OF COLUMBUS, OHIO
DEPARTMENT OF PUBLIC SERVICE
DIVISION OF DESIGN AND CONSTRUCTION

STD DWG
4104

Hassan Zahran

5/01/2014

CITY ENGINEER

SHT 1 OF 2

NOTES:

1. PEDESTAL SUPPORTS SHALL BE COATED IN ACCORDANCE WITH THE PLANS.

2. PEDESTAL SUPPORTS SHALL BE DESIGNED FOR 90 MPH WINDS, APPROPRIATE GUST FACTOR AND LOADING AS PER PLAN.

3. 4 ANCHOR BOLTS SHALL BE INCLUDED WITH NUTS, LOCK WASHERS AND EIGHT (8) SHIMS.

4. A 20" TRANSFORMER BASE (ALSO KNOWN AS T-BASE) AND ALL CONNECTING HARDWARE SHALL BE FURNISHED WITH EACH PEDESTAL. FOR TRANSFORMER BASE DETAILS SEE CITY OF COLUMBUS STANDARD CONSTRUCTION DRAWING 4105.

5. THE PEDESTAL SHALL BE FURNISHED AND INSTALLED WITH A POLE SHAFT THAT HAS A TAPERED CROSS-SECTIONAL DESIGN AND A ONE-PIECE CONSTRUCTION WITH NO LONGITUDINAL OR CIRCUMFERENTIAL WELDS EXCEPT FOR THE WELD NEEDED TO ATTACH THE POLE BASE. THE POLE SHAFT SHALL HAVE A ROUND CROSS-SECTIONAL DESIGN.

6. THE POLE BASE SHALL TELESCOPE THE POLE SHAFT. THE BASE SHALL BE WELDED TO THE POLE SHAFT BY 2 CIRCUMFERENTIAL WELDS: ONE ON THE OUTSIDE OF THE POLE AT THE BASE TOP AND ONE ON THE INSIDE OF THE BASE AT THE POLE BOTTOM.

7. 4 BOLT COVERS AND A POLE CAP SHALL BE FURNISHED AND INSTALLED WITH EACH PEDESTAL. THE POLE BASE PLATE SHALL BE LARGE ENOUGH TO FIT OVER ALL OF THE T-BASE TOP OPENINGS. USING AN ALUMINUM FILLER PLATE ON TOP OF THE T-BASE TO COVER ANY OPENING IS ACCEPTABLE. THE FILLER PLATE SHALL BE MANUFACTURED TO FIT THE T-BASE TOP EXACTLY AND BE AT LEAST 1/8 INCH THICK AND MADE FROM 5052-H32 ALLOY. BOTH SIDES AND THE EDGES OF THE FILLER PLATE SHALL BE COATED TO MATCH THE POLE AND T-BASE.

8. FOR FOUNDATION DETAILS SEE CITY OF COLUMBUS STANDARD DRAWING 4163.

9. FOR PEDESTRIAN PUSHBUTTON SIGN DETAILS SEE CITY OF COLUMBUS STANDARD CONSTRUCTION DRAWING 4230.

21' PEDESTAL & VEHICULAR SIGNAL HEAD MOUNTING

CITY OF COLUMBUS, OHIO
DEPARTMENT OF PUBLIC SERVICE
DIVISION OF DESIGN AND CONSTRUCTION

STD DWG
4104

Hassan Zahran

5/01/2014

CITY ENGINEER

SHT 2 OF 2

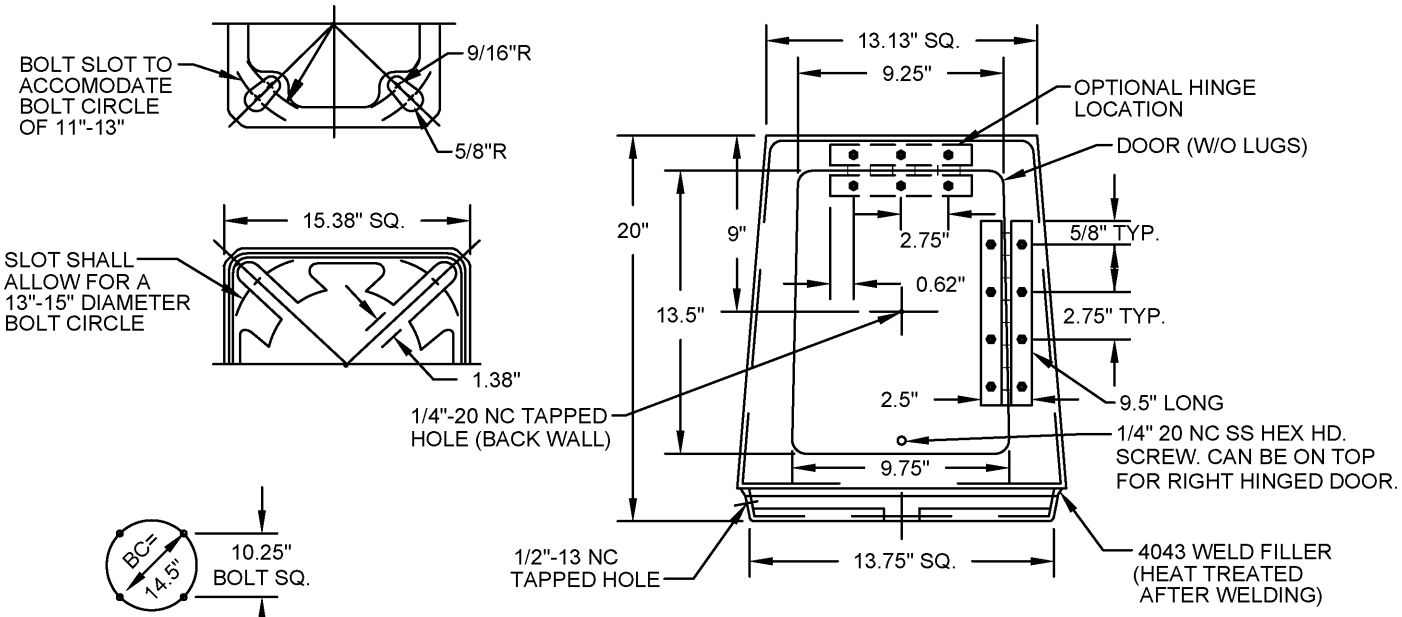

3/4" OR 1" ANCHOR BOLTS

DOOR SIZE

9.25"x9.75"x13.5"

BASE SUPPLIED WITH (8) STEEL WASHERS, 1/2" THICK X 2.5"/2.75" DIA. (WASHERS MECHANICALLY GALVANIZED PER ASTM B454)

STAINLESS STL. PIANO HINGE CENTERED ON DOOR. (USE AS TEMPLATE FOR DRILLING 3/16" DIA. HOLES IN DOOR AND BASE FOR POP RIVETS.)

ALUMINUM TRANSFORMER BASE

SHAFT SIZE	BASE HEIGHT	TOP SQUARE	BOTTOM SQUARE	TOP BOLT CIRCLE	BOTTOM BOLT CIRCLE
7" & 8"	20"	13.13"	15.38"	11"-13"	14.5"

NOTES:

A 13.75" SQUARE BOTTOM SECTION CAN BE WELDED TO THE TRANSFORMER BASE TO PROVIDE A 13" TO 15" BOLT CIRCLE.

TRANSFORMER BASE SHALL BE SUPPLIED WITH A TOP OR RIGHT SIDE HINGED DOOR, SCREW AND 1/2" THICK x 2.5"/2.75" OD GALVANIZED WASHERS.

CONNECTING HARDWARE TO ATTACH SHAFT BASE TO TRANSFORMER BASE SHALL BE SUPPLIED.

TRANSFORMER BASE SHALL ACCEPT 3/4" OR 1" DIAMETER ANCHOR BOLTS.

TRANSFORMER BASE SHALL BE COATED IN ACCORDANCE WITH THE PLANS.

FOR FOUNDATION DETAILS SEE CITY OF COLUMBUS STANDARD DRAWING 4163.

TRANSFORMER BASE

CITY OF COLUMBUS, OHIO
DEPARTMENT OF PUBLIC SERVICE
DIVISION OF DESIGN AND CONSTRUCTION

STD DWG
4105

5/01/2014

CITY ENGINEER

SHT 1 OF 1

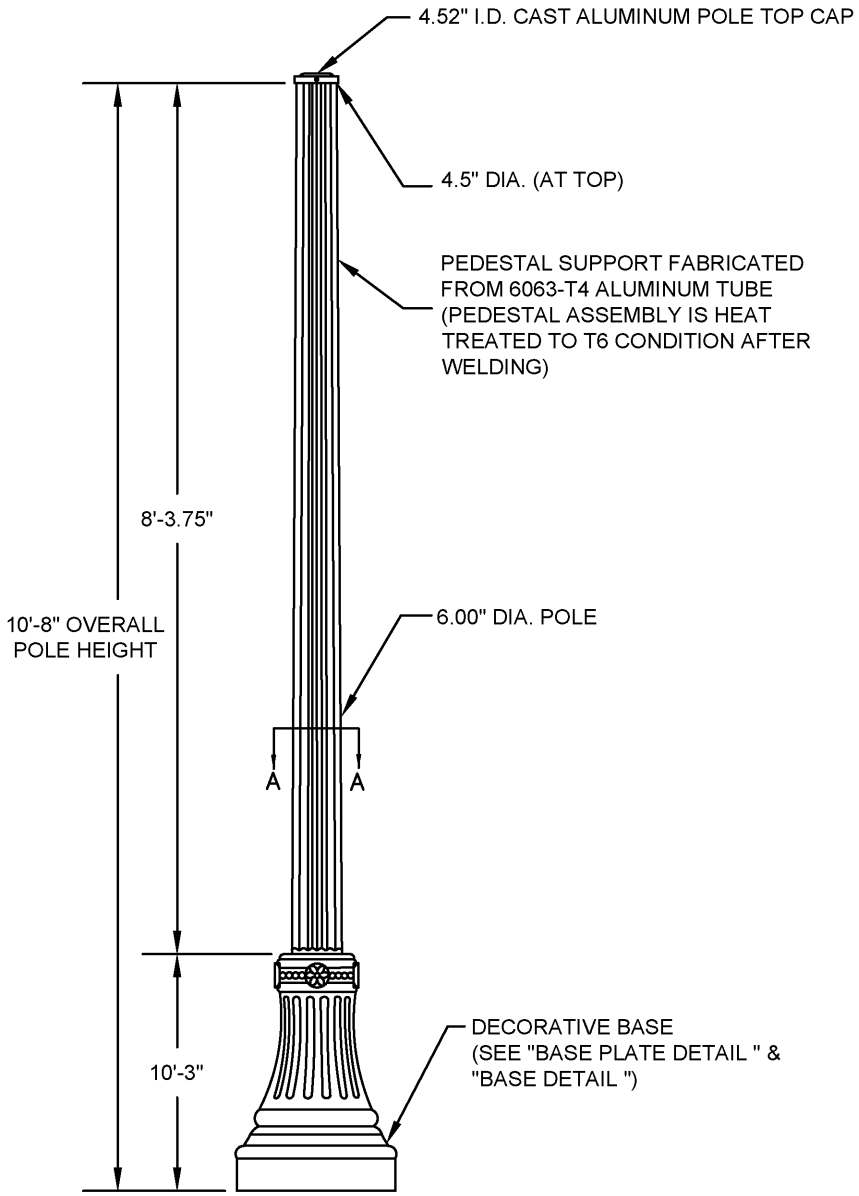

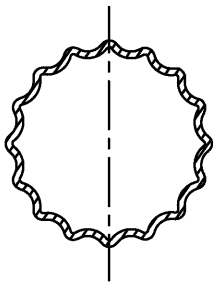

SECTION A-A

10.7 ' DECORATIVE PEDESTAL

CITY OF COLUMBUS, OHIO DEPARTMENT OF PUBLIC SERVICE DIVISION OF DESIGN AND CONSTRUCTION	STD DWG 4106
Hassan Zahran	5/01/2014
CITY ENGINEER	SHT 1 OF 2

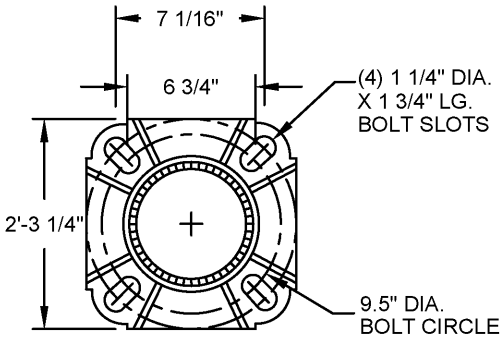

BASE PLATE DETAIL

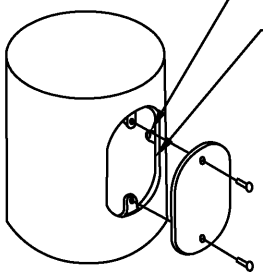

HANDHOLE DETAIL

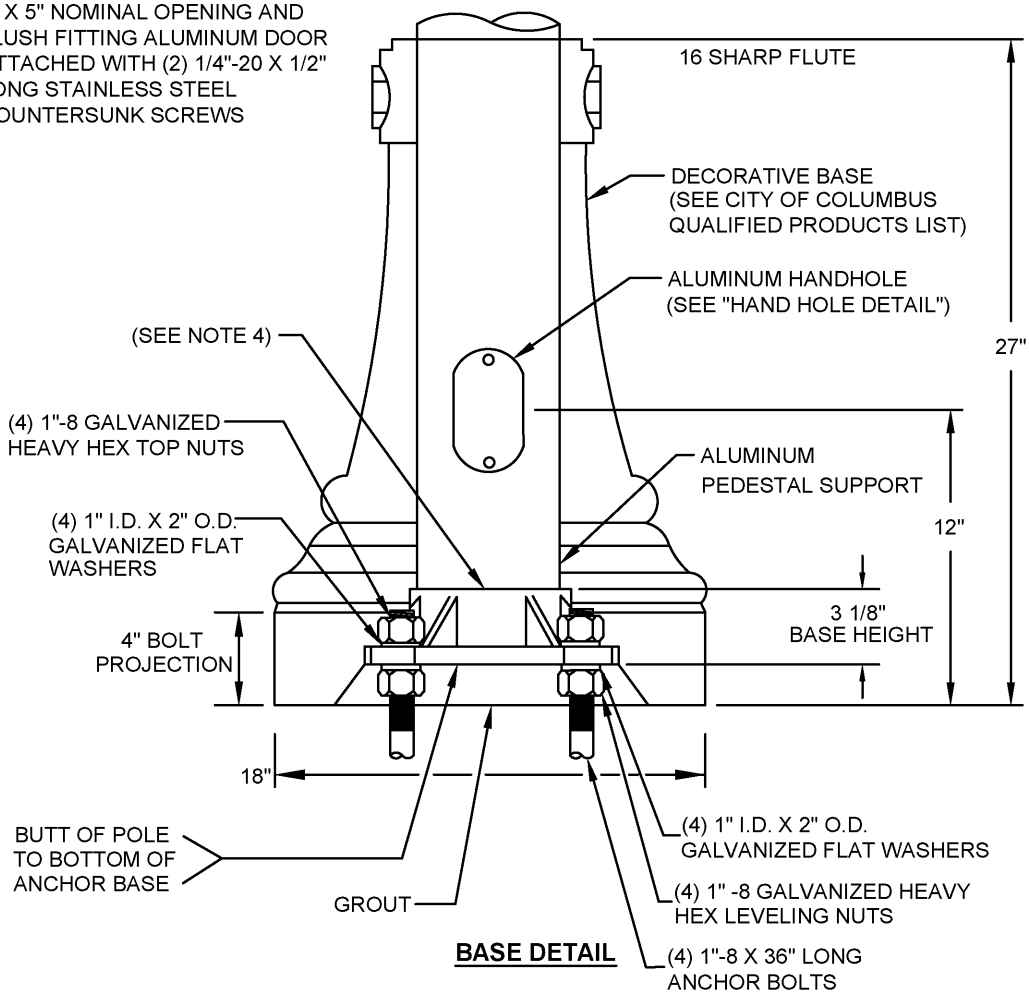

BASE DETAIL

NOTES:

1. PEDESTAL SUPPORTS SHALL BE COATED IN ACCORDANCE WITH THE PLANS.
2. PEDESTAL SUPPORTS SHALL BE DESIGNED FOR 90 MPH WINDS, APPROPRIATE GUST FACTOR AND LOADING AS PER PLAN.
3. FOUR ANCHOR BOLTS SHALL BE INCLUDED WITH NUTS, LOCK WASHERS AND EIGHT (8) SHIMS.
4. THE POLE BASE SHALL TELESCOPE THE POLE SHAFT. THE BASE SHALL BE WELDED TO THE POLE SHAFT BY TWO CIRCUMFERENTIAL WELDS: ONE ON THE OUTSIDE OF THE POLE AT THE BASE TOP AND ONE ON THE INSIDE OF THE BASE AT THE POLE BOTTOM.
5. FOR FOUNDATION DETAILS SEE CITY OF COLUMBUS STANDARD DRAWING 4163.

10.7' DECORATIVE PEDESTAL

CITY OF COLUMBUS, OHIO DEPARTMENT OF PUBLIC SERVICE DIVISION OF DESIGN AND CONSTRUCTION	STD DWG 4106
Hassan Zahran	5/01/2014
CITY ENGINEER	SHT 2 OF 2

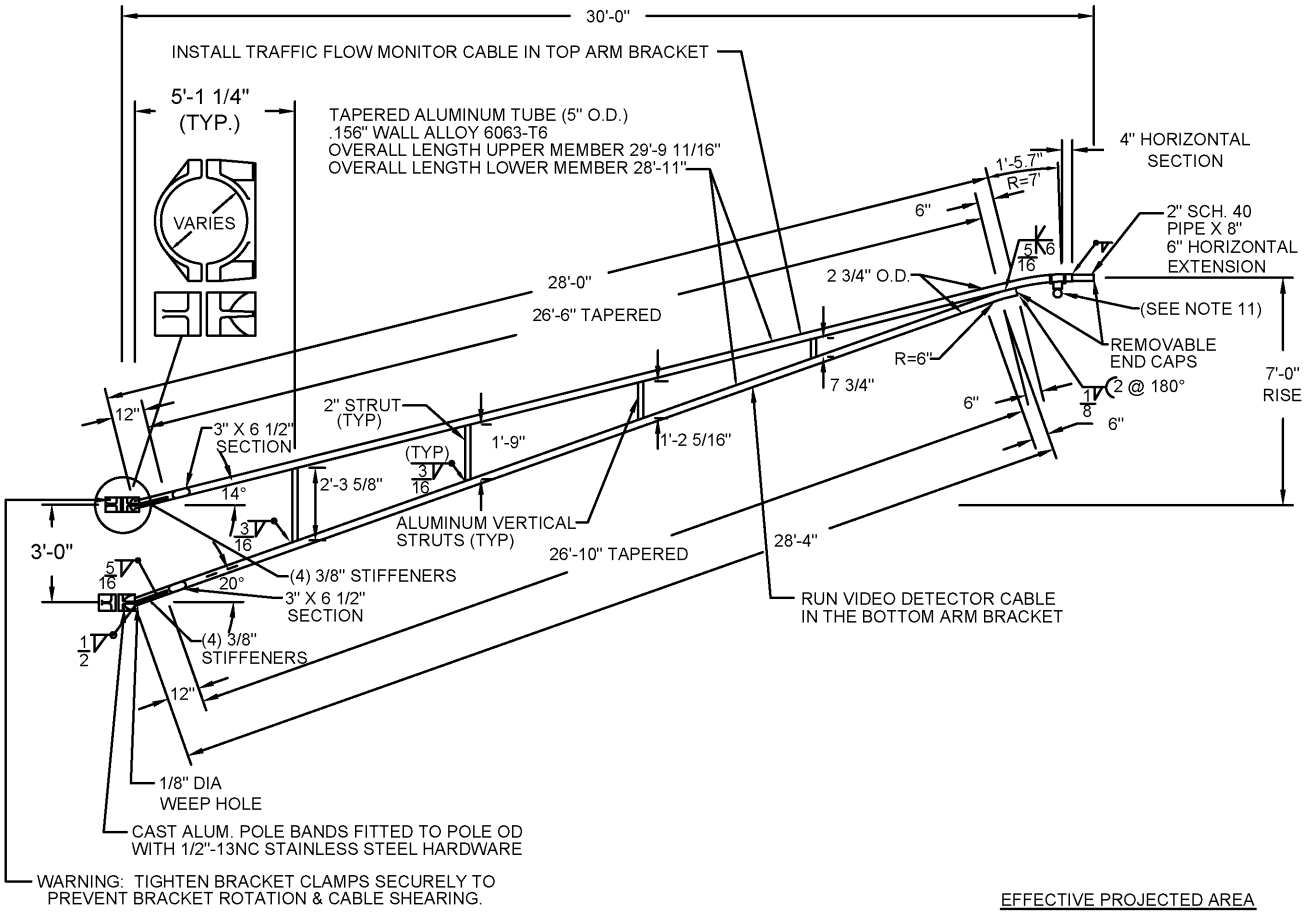

EFFECTIVE PROJECTED AREA

TRAFFIC FLOW CAMERA - 1 SQ FT
VIDEO DETECTOR - 0.75 SQ FT

WEIGHT IN POUNDS

TRAFFIC FLOW CAMERA - 20
VIDEO DETECTOR - 8

SAFETY FACTOR > 1.6

LOADING FACTORS

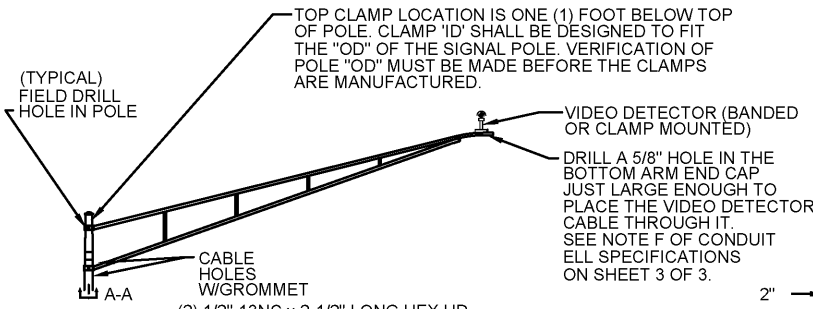

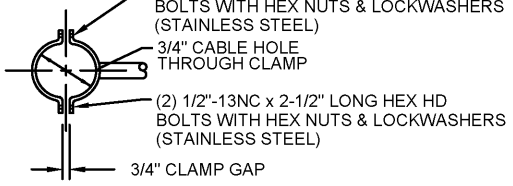

VIEW A-A

VERIFY UPPER & LOWER ID DIMENSIONS

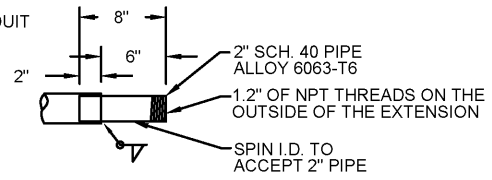

HORIZONTAL SLIPFITTER

30' - 0" BRACKET ARM

VIDEO DETECTOR / TRAFFIC FLOW MONITOR BRACKET ARM

CITY OF COLUMBUS, OHIO
DEPARTMENT OF PUBLIC SERVICE
DIVISION OF DESIGN AND CONSTRUCTION

STD DWG
4110

5/01/2014

CITY ENGINEER

SHT 1 OF 3

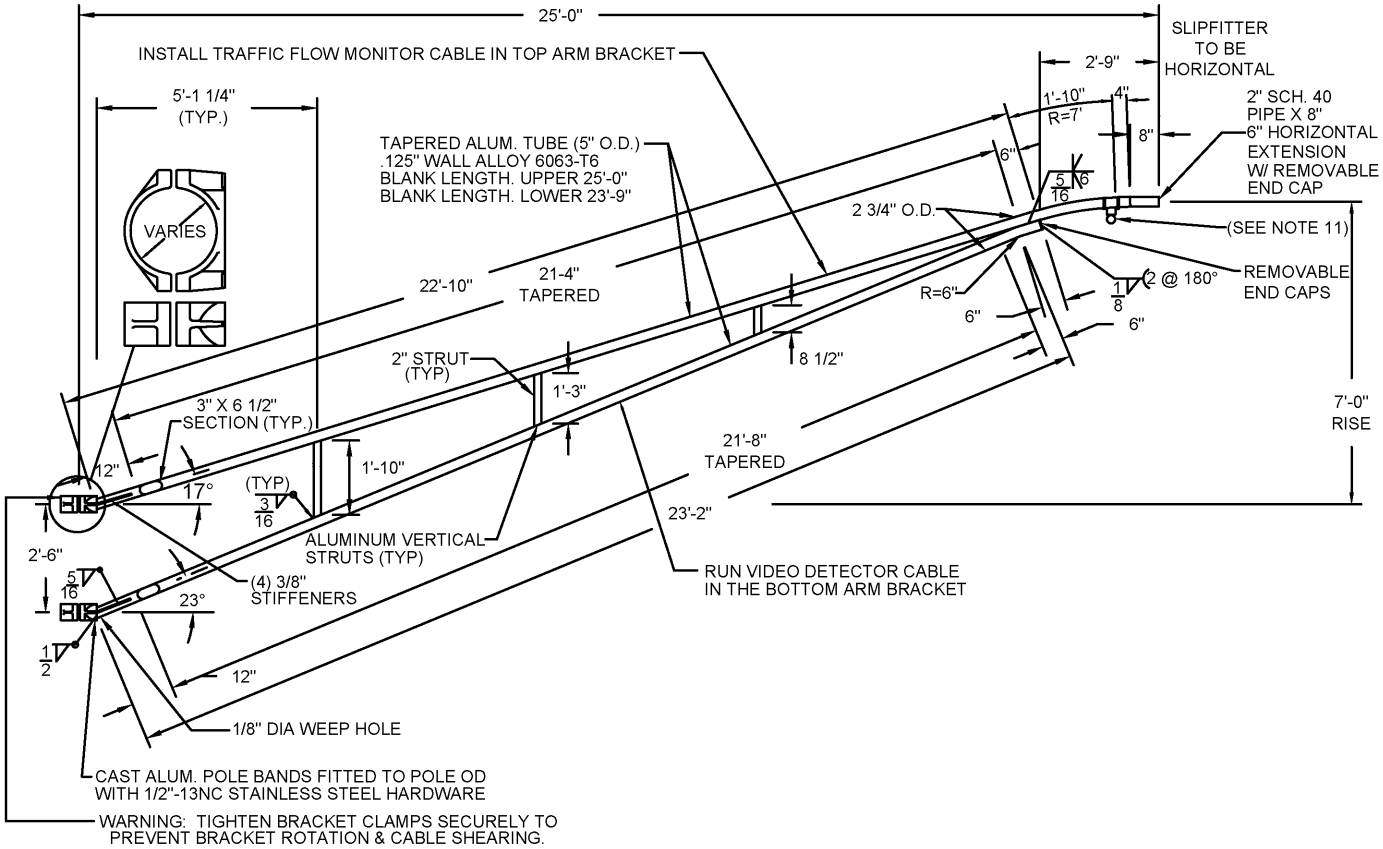

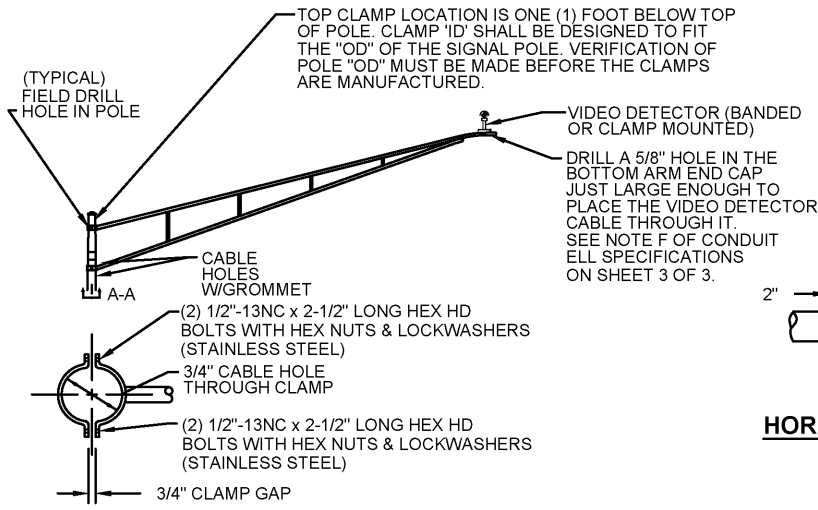

VIEW A-A

VERIFY UPPER & LOWER ID DIMENSIONS

EFFECTIVE PROJECTED AREA

TRAFFIC FLOW CAMERA - 1 SQ FT
VIDEO DETECTOR - 0.75 SQ FT

WEIGHT IN POUNDS

TRAFFIC FLOW CAMERA - 20
VIDEO DETECTOR - 8

SAFETY FACTOR > 1.6

LOADING FACTORS

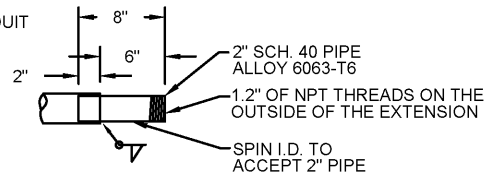

HORIZONTAL SLIPFITTER

25' - 0" BRACKET ARM

VIDEO DETECTOR / TRAFFIC FLOW MONITOR BRACKET ARM

CITY OF COLUMBUS, OHIO
DEPARTMENT OF PUBLIC SERVICE
DIVISION OF DESIGN AND CONSTRUCTION

STD DWG
4110

Hassan Zahran

5/01/2014

CITY ENGINEER

SHT 2 OF 3

INSTALL THE TRAFFIC FLOW MONITOR CABLE IN THE TOP ARM BRACKET.
INSTALL THE VIDEO DETECTOR CABLE IN THE BOTTOM ARM BRACKET.

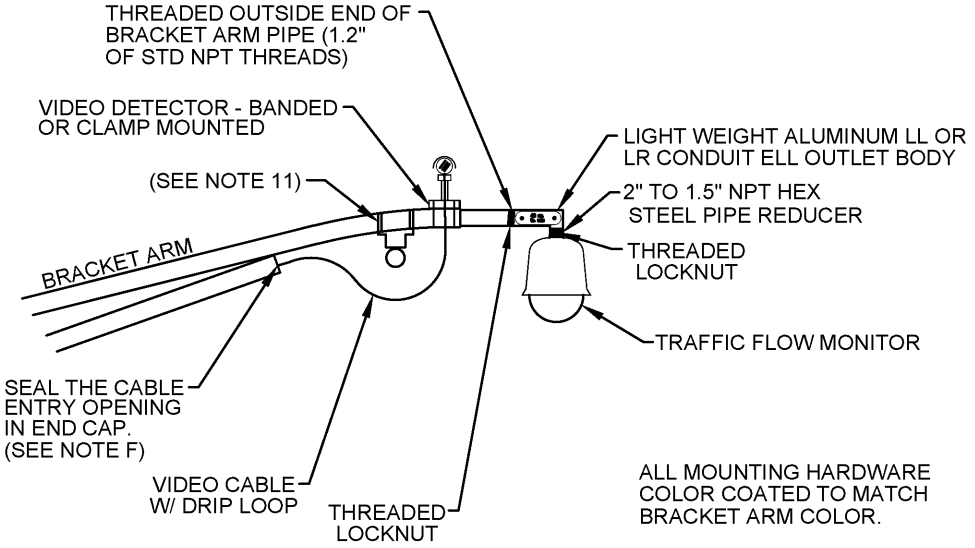

A) THREADED BODY (NPT) WITH NON-CORROSIVE HARDWARE
B) 48 CU. IN. INTERIOR AREA
C) FLAT COVER WITH SOLID NEOPRENE GASKET
D) COVER OPENING - 6" X 2.4"
E) LIGHT WEIGHT ALUMINUM BODY
F) PROVIDE #10 RUBBER STOPPER WITH A HOLE AND SLOT FOR OUTGOING CABLE; ENLARGE STOPPER HOLE AS NEEDED JUST ENOUGH TO FIT CABLE DIAMETER

LL/LR CONDUIT ELL SPECS

NOTES:

1. BRACKET ARMS SHALL BE INSTALLED PARALLEL OR PERPENDICULAR TO THE ROAD CENTERLINE AS PER PLAN.

2. ALL CABLES SHALL BE RUN INSIDE A BRACKET TUBE. ENTRY HOLES INTO THE SIGNAL POLE SHALL BE FIELD DRILLED.

3. BRACKET ARM, VIDEO DETECTOR OR & TRAFFIC FLOW MONITOR DOME SHALL BE COLOR COATED AS PER PLAN.

4. HEAT TREAT AFTER WELDING.

5. BRACKET ARMS SHALL BE COATED IN ACCORDANCE WITH THE PLANS TO MATCH THE SIGNAL SUPPORT OR STAIN POLE STRUCTURE.

6. A TRUSS-STYLE DESIGN SHALL BE USED AND SHALL BE CAPABLE OF SUPPORTING A LUMINAIRE WEIGHING 75 POUNDS AND HAVING AN EFFECTIVE PROJECTED AREA OF 1.6 SQUARE FEET AND OR CAMERA (VIDEO DETECTOR OR TRAFFIC FLOW MONITOR).

7. BRACKET ARMS SHALL BE DESIGNED FOR A 90 MPH WIND LOADING WITH APPROPRIATE GUST FACTOR.

8. THE CLAMP MOUNTED ARM SHALL COME WITH BOTH CLAMPS AND MOUNTING HARDWARE.

9. BRACKET ARMS SHALL BE DESIGNED TO FIT A MASTARM POLE SHAFT THAT HAS A NOMINAL TAPER OF 0.14 INCH PER FOOT AND A BOTTOM-OF-POLE OUTSIDE DIAMETER AS PER PLAN.

10. DETAILS AND DIMENSIONS ILLUSTRATED ON THESE DRAWINGS ILLUSTRATE AN ALUMINUM TRUSS. A STEEL, GALVANIZED, COATED, TRUSS MAY BE PROVIDED IN PLACE OF AN ALUMINUM TRUSS. ALL STRUCTURAL COMPONENTS REMAIN THE RESPONSIBILITY OF THE MANUFACTURER.

11. FOR MECHANICAL DAMPENING DEVICE SEE STANDARD DRAWING 4122.

NOTES AND CONDUIT ELL SPECS

VIDEO DETECTOR / TRAFFIC FLOW MONITOR BRACKET ARM

CITY OF COLUMBUS, OHIO
DEPARTMENT OF PUBLIC SERVICE
DIVISION OF DESIGN AND CONSTRUCTION

STD DWG
4110

5/01/2014

CITY ENGINEER

SHT 3 OF 3

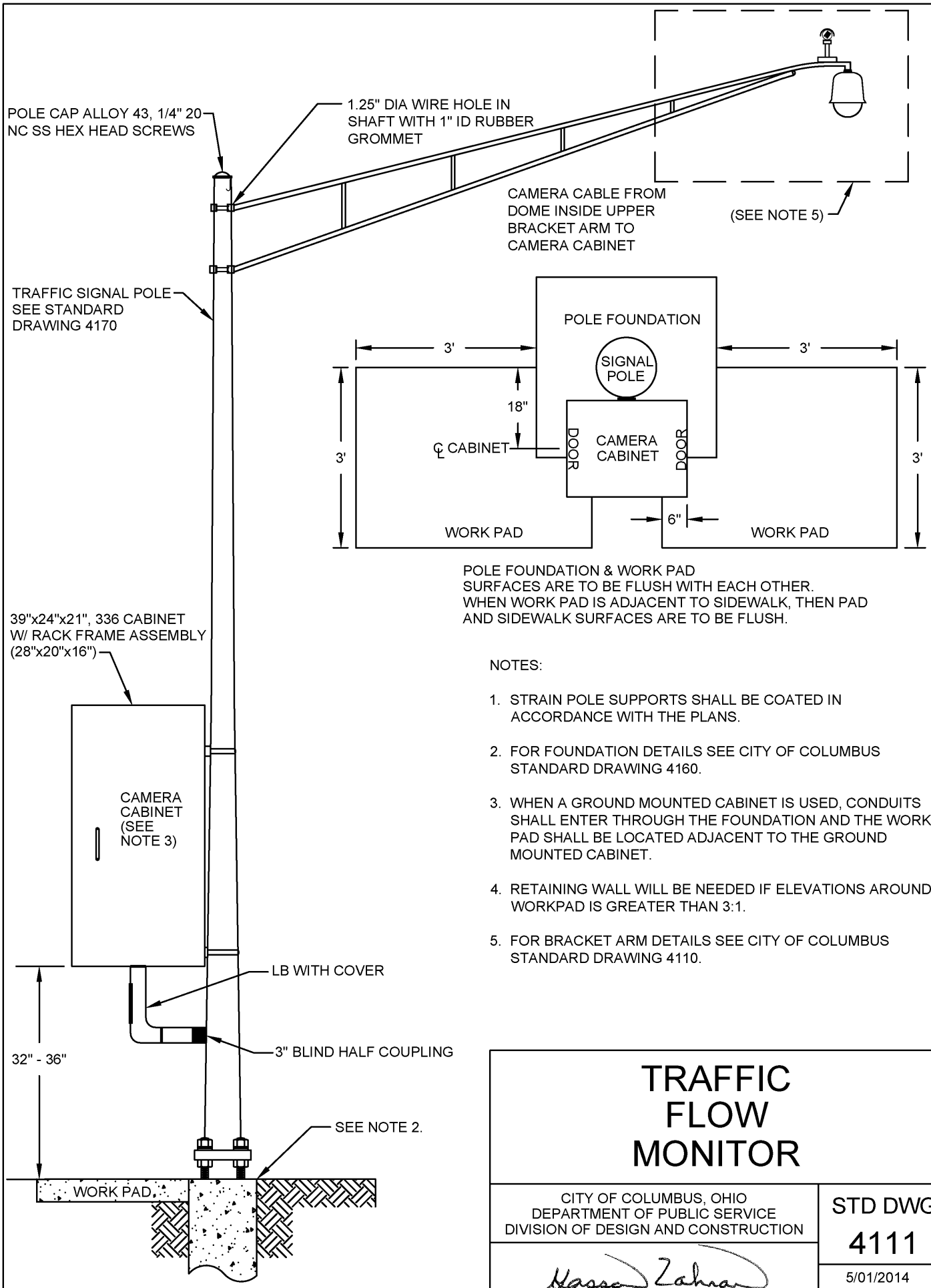

POLE FOUNDATION & WORK PAD SURFACES ARE TO BE FLUSH WITH EACH OTHER. WHEN WORK PAD IS ADJACENT TO SIDEWALK, THEN PAD AND SIDEWALK SURFACES ARE TO BE FLUSH.

NOTES:

1. STRAIN POLE SUPPORTS SHALL BE COATED IN ACCORDANCE WITH THE PLANS.
2. FOR FOUNDATION DETAILS SEE CITY OF COLUMBUS STANDARD DRAWING 4160.
3. WHEN A GROUND MOUNTED CABINET IS USED, CONDUITS SHALL ENTER THROUGH THE FOUNDATION AND THE WORK PAD SHALL BE LOCATED ADJACENT TO THE GROUND MOUNTED CABINET.
4. RETAINING WALL WILL BE NEEDED IF ELEVATIONS AROUND WORKPAD IS GREATER THAN 3:1.
5. FOR BRACKET ARM DETAILS SEE CITY OF COLUMBUS STANDARD DRAWING 4110.

TRAFFIC FLOW MONITOR

CITY OF COLUMBUS, OHIO
DEPARTMENT OF PUBLIC SERVICE
DIVISION OF DESIGN AND CONSTRUCTION

Hassan Zahra

CITY ENGINEER

STD DWG
4111

5/01/2014

SHT 1 OF 1

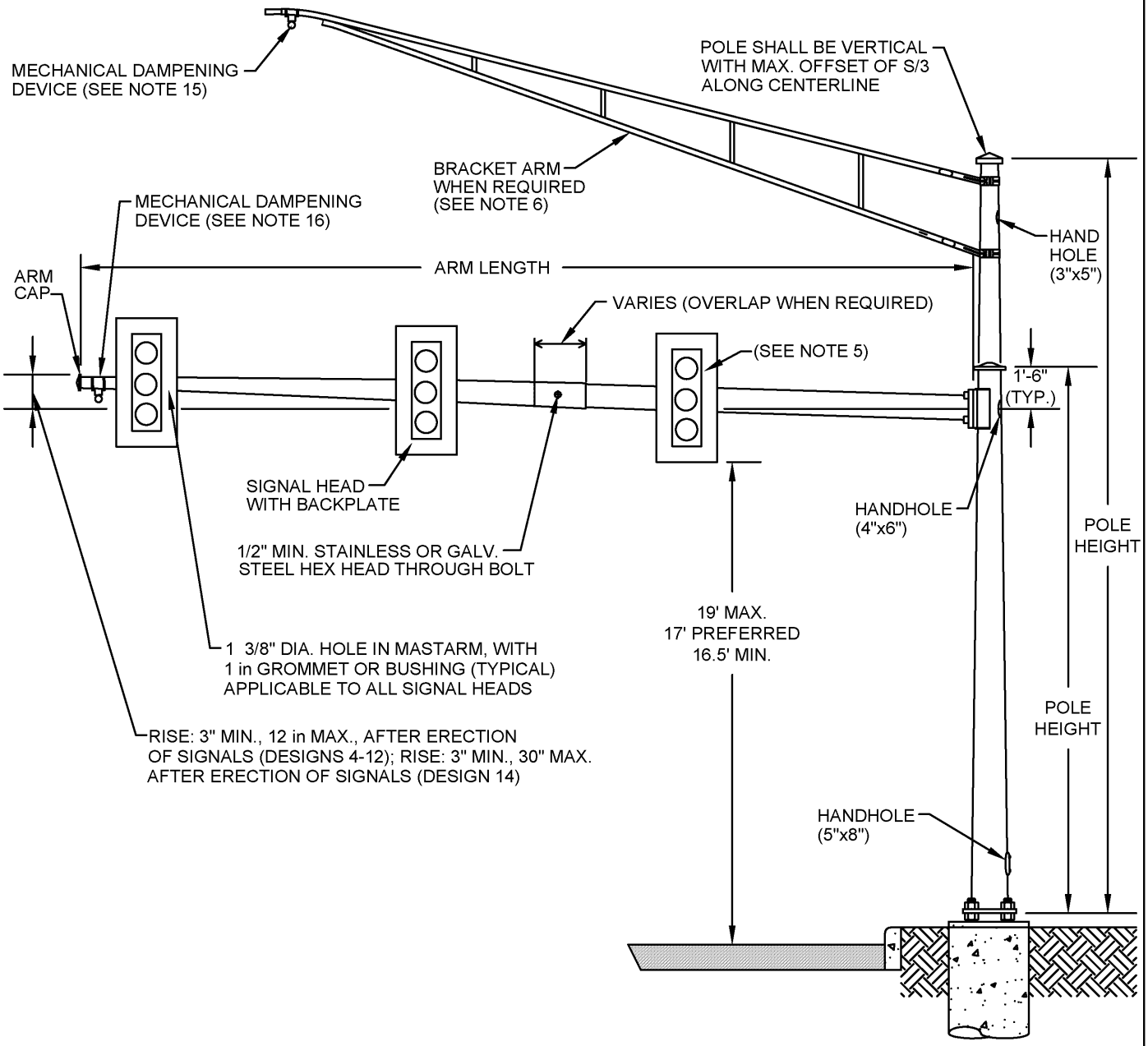

STANDARD CITY OF COLUMBUS MAST ARM

CITY OF COLUMBUS, OHIO DEPARTMENT OF PUBLIC SERVICE DIVISION OF DESIGN AND CONSTRUCTION	STD DWG 4120
Hassan Zahran	5/01/2014
CITY ENGINEER	SHT 1 OF 10

TABLE 1 - PART A - POLE DIMENSIONS

DESIGN NO.	MAXIMUM DESIGN AREA SQ FT (NOTE A)	DESIGN DISTANCE FROM ℄ FT	POLE			ARM		TWO PIECE ARM		
			TYPE	WALL THICK	SIZE	WALL THICK	SIZE	TYPE	WALL THICK	SIZE
4	42	37.5	ROUND	.239	13x9.78x23'	.239	10.32X5.00X38'	ROUND		
12	42	47.5	ROUND	.299	14x10.78x23'	TOT. LENGTH = 48'		ROUND	.299	11x8.62x17' +
									.179	9.19x4.68x32'-3"
13	40	59.5	ROUND	.299	16x12.78x23'	TOT. LENGTH = 60'		ROUND	.299	13x8.80x30' +
									.239	9.62x5.14x32'
14	38	69.5	ROUND	.299	17x13.78x23'	TOT. LENGTH = 70'		ROUND	.3125	14x9.1x35' +
									.239	9.60x4.42x37'
14	38	69.5	ROUND	.299	17x13.78x23'	TOT. LENGTH = 70'		ROUND	0.313	14x8.68x38' +
									0.250	9.50x4.74x34'
C15	50	78.5	ROUND	.313	18x14.22x27'	TOT. LENGTH = 79'		ROUND	.313	14.40x8.70x40.75' +
									.179	9.34x3.71x40.25'
C16 DOUBLE ARM	48 / 48	49.5 49.5	ROUND	.313	16x12.22x27'	TOT. LENGTH = 50'/50'		ROUND	.250	12.00x9.55x17.5' +
									.179	10.19x5.40x34.25'
									.250	12.00x9.55x17.5' +
									.179	10.19x5.40x34.25'

ALL DIMENSIONS ARE IN INCHES, UNLESS OTHERWISE NOTED.

TABLE 1 - PART B - POLE DIMENSIONS

DESIGN NO.	ARM ATTACHMENT								ANCHOR BASE					ANCHOR BOLT		PLATE SKIRT	
	A	B	C	D	E	F	G	P	BOLT CIRCLE	S	J	T	H	DIA.	L	M	K
4	16.50	14.50	12.50	9.50	1.50	2	1.25	0.25	18	18.50	12.75	2	2.13	1.75	84	6.75	7.75
12	16.50	14.50	12.50	9.50	1.75	2	1.50	0.31	20	20.50	14.13	2	2.38	2	90	7.5	8.5
13	19.50	16.50	15	12	1.50	2	1.50	0.31	22	23	15.56	2	2.38	2	90	7.5	8.5
14	19.50	16.50	15	12	2.00	2	2.00	0.38	22	23	15.56	2	2.38	2	90	7.5	8.5
C15	24	19	18	13	2.00	2	2.00	0.38	24	24	17	2	2.38	2	90	7.5	8.5
C16 DOUBLE ARM	19	15	14	10	1.75	2	1.50	0.31	22	23	15.56	2	2.38	2	90	7.5	8.5
	19	15	14	10	1.75	2	1.50	0.31									

ALL DIMENSIONS ARE IN INCHES, UNLESS OTHERWISE NOTED.

THESE DESIGNS USE FULL PENETRATION WELDS AT THE ARM AND BASE PLATE CONNECTIONS.

NOTES:

A. MAXIMUM DESIGN AREA IS BASED ON 90 MPH DESIGN WIND SPEED WITH A PRESSURE OF 25 PSF.

B. DIMENSION LOCATIONS ARE ILLUSTRATED ON SHEETS 3 & 4.

STANDARD CITY OF COLUMBUS MAST ARM

CITY OF COLUMBUS, OHIO
DEPARTMENT OF PUBLIC SERVICE
DIVISION OF DESIGN AND CONSTRUCTION

Hassan Zahran

CITY ENGINEER

STD DWG
4120

5/01/2014

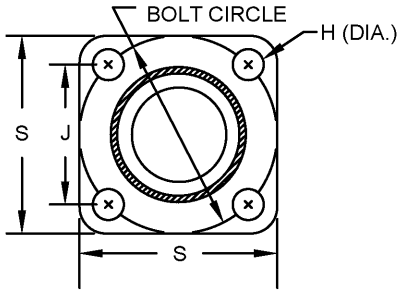

BASE PLATE

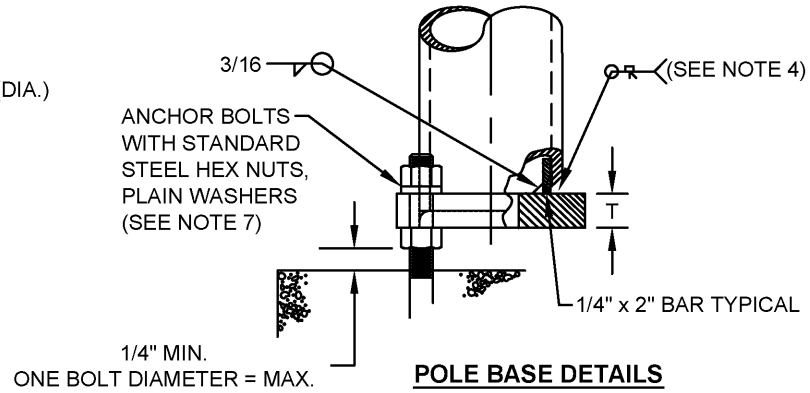

POLE BASE DETAILS

DESIGN 4, 12, 13, & 14

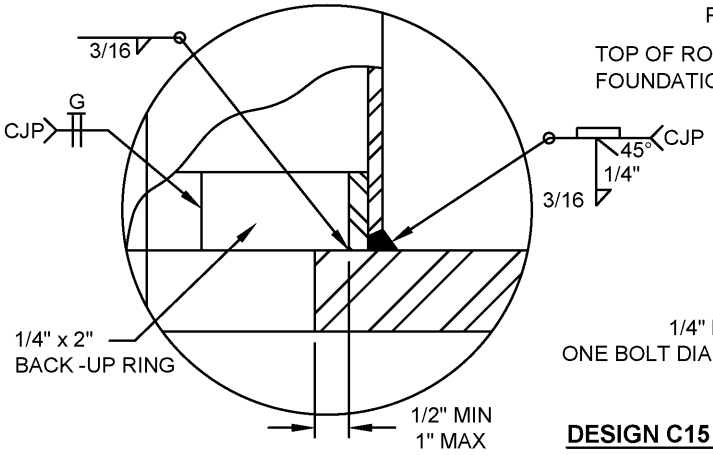

POLE BASE AND ARM FLANGE WELD DETAIL

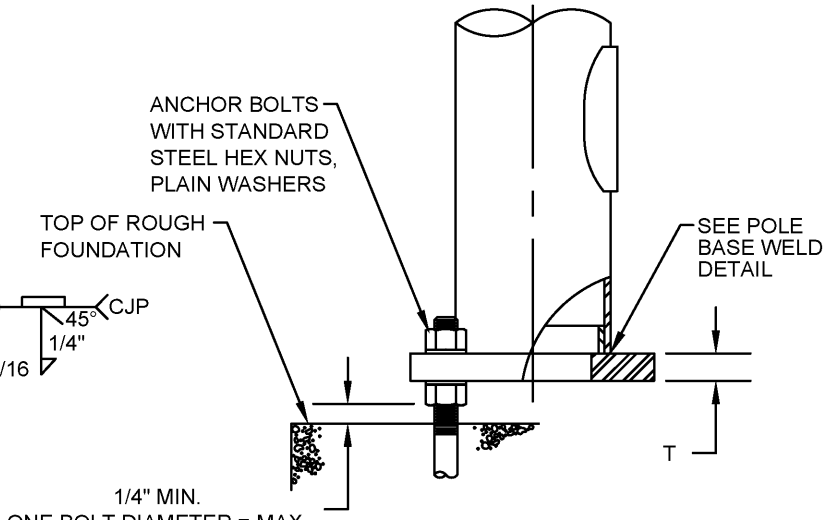

POLE BASE DETAILS

DESIGN C15 & C16

BASE CONNECTION

STANDARD CITY OF COLUMBUS MAST ARM

CITY OF COLUMBUS, OHIO
DEPARTMENT OF PUBLIC SERVICE
DIVISION OF DESIGN AND CONSTRUCTION

STD DWG
4120

5/01/2014

CITY ENGINEER

SHT 3 OF 10

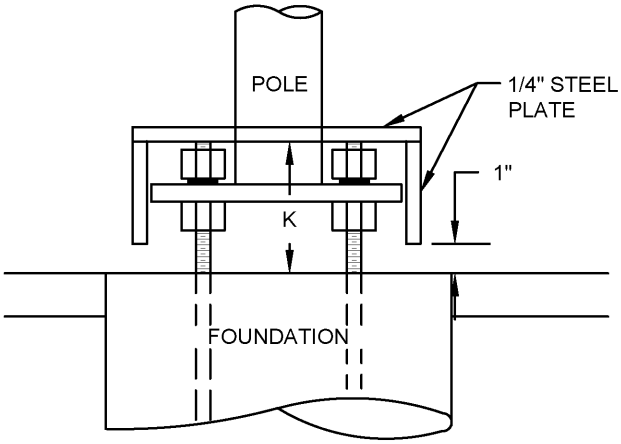

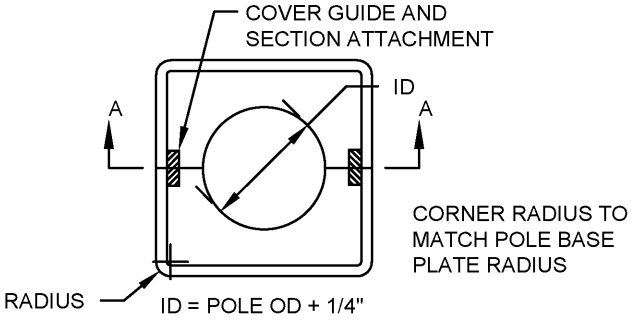

TOP VIEW

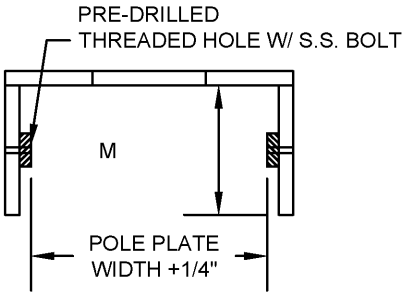

SECTION A-A
POLE PLATE SKIRT

STEEL BASE COVER

STANDARD CITY OF COLUMBUS MAST ARM

CITY OF COLUMBUS, OHIO DEPARTMENT OF PUBLIC SERVICE DIVISION OF DESIGN AND CONSTRUCTION	STD DWG 4120
Hassan Zahran	5/01/2014
CITY ENGINEER	SHT 4 OF 10

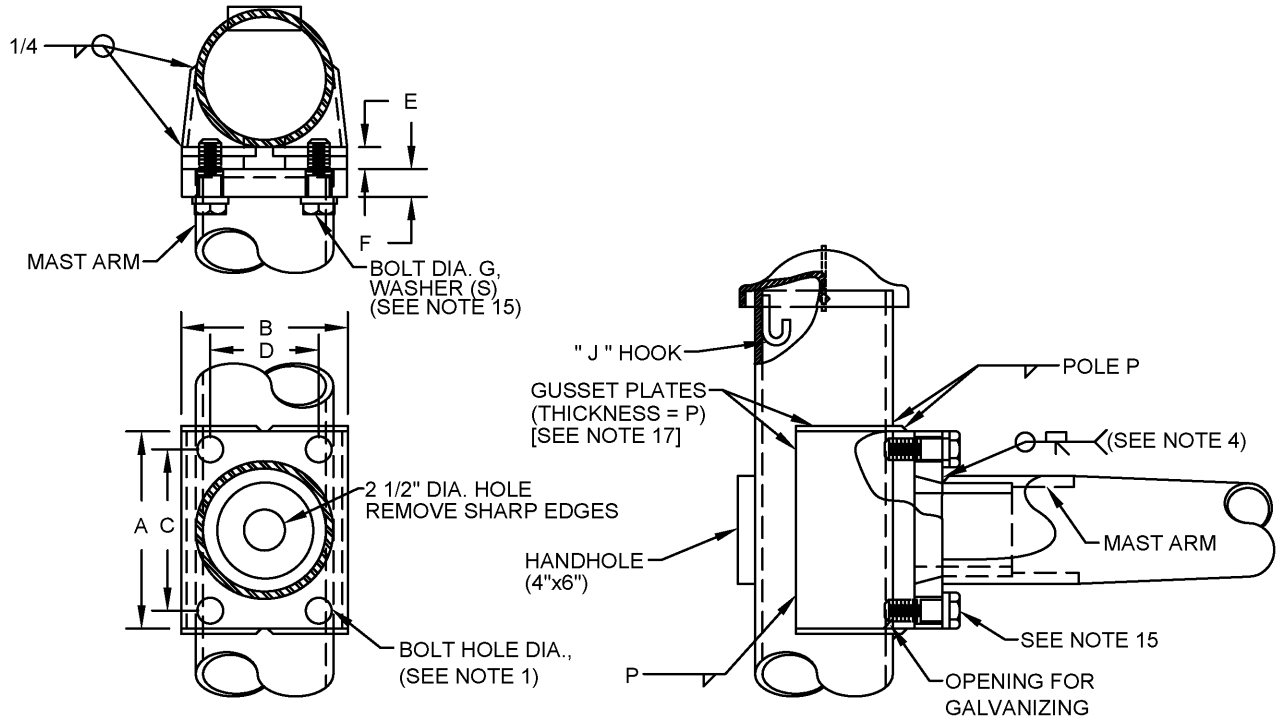

ARM ATTACHMENT (TYP.)
DESIGN 4, 12, 13 & 14

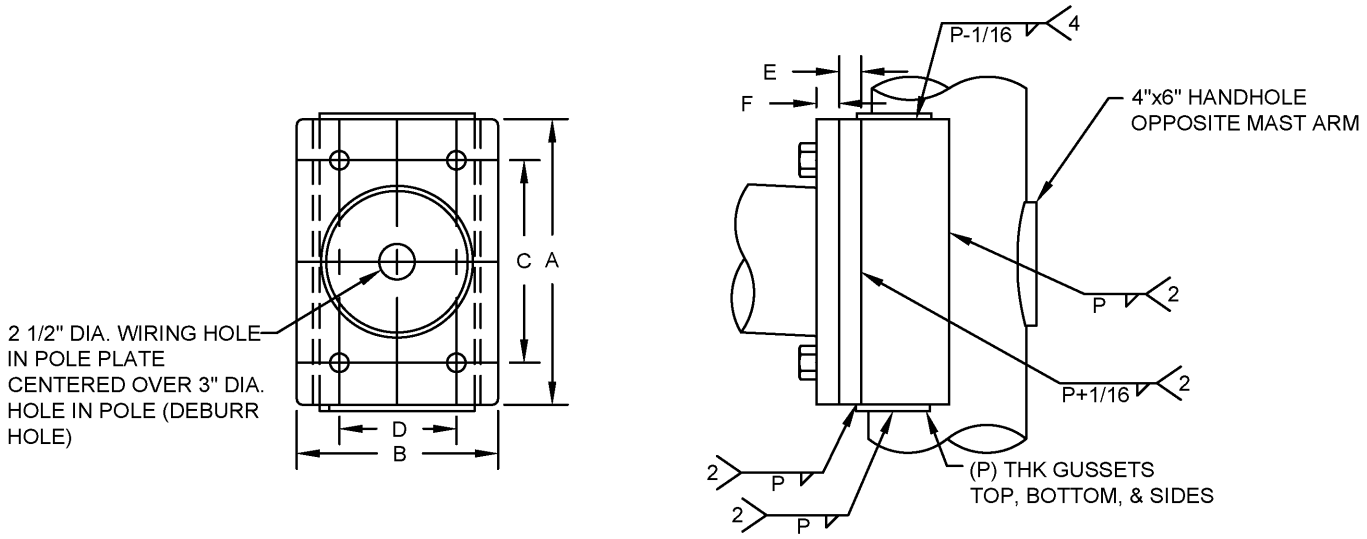

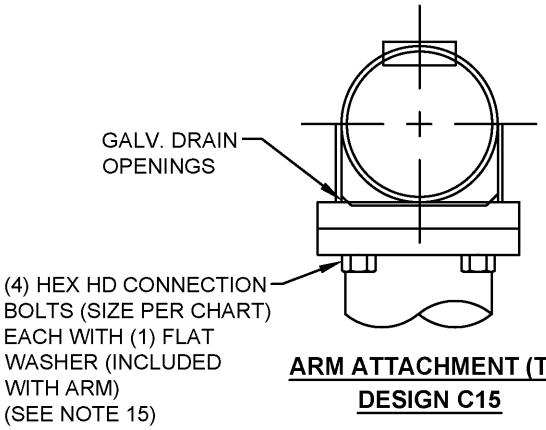

ARM ATTACHMENT (TYP.)
DESIGN C15

ARM ATTACHMENTS

STANDARD CITY OF COLUMBUS MAST ARM

CITY OF COLUMBUS, OHIO DEPARTMENT OF PUBLIC SERVICE DIVISION OF DESIGN AND CONSTRUCTION	STD DWG 4120
Hassan Zahra	5/01/2014
CITY ENGINEER	SHT 5 OF 10

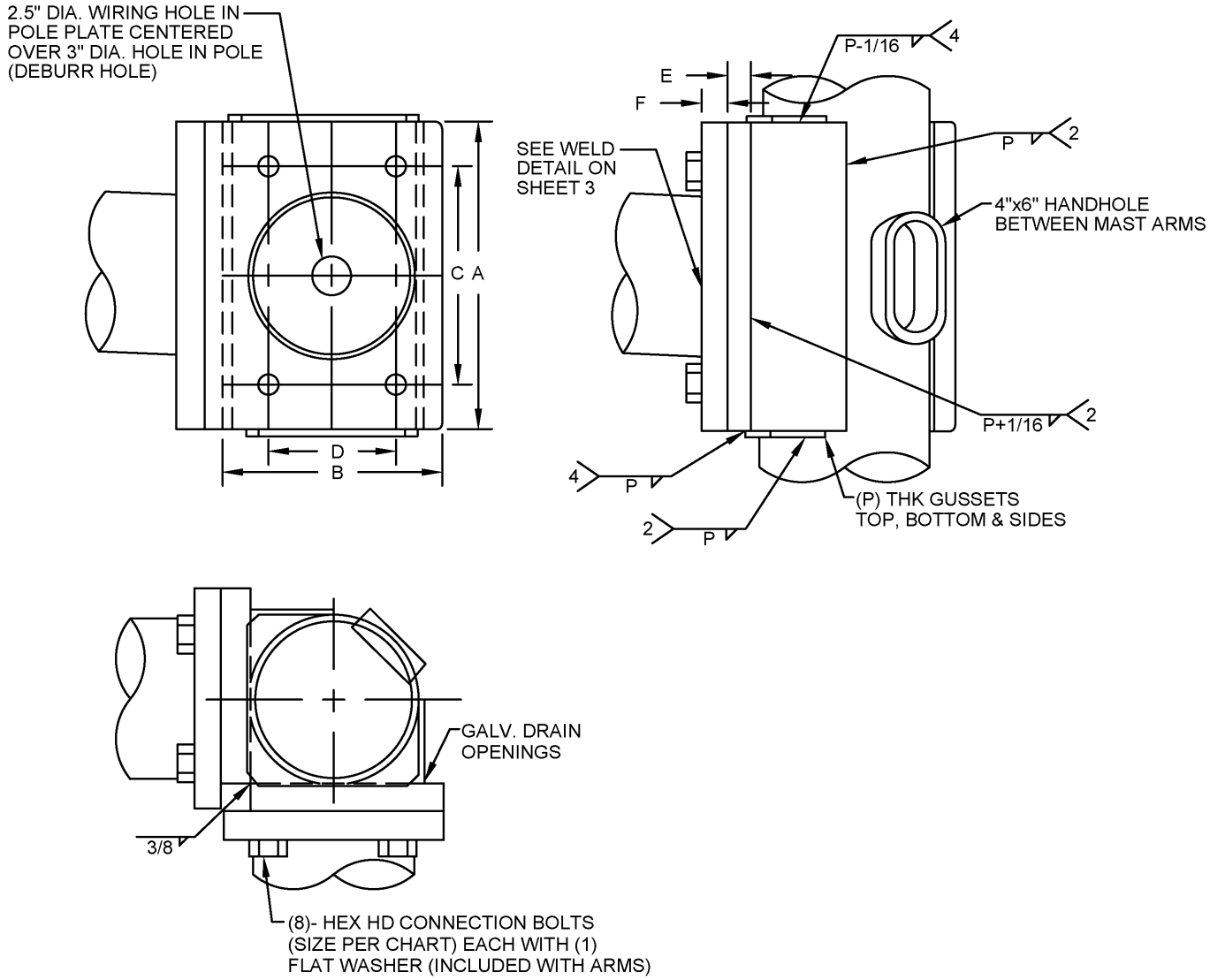

ARM ATTACHMENT (TYP.)
DESIGN C16

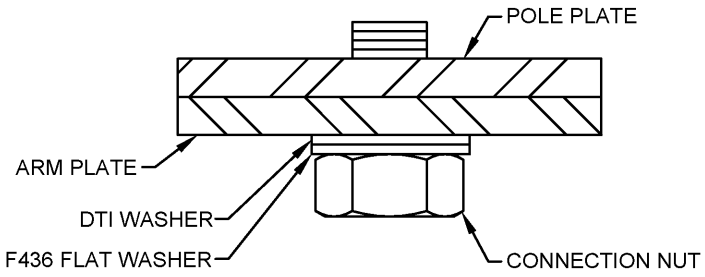

DTI WASHER PLACEMENT
(FOR DESIGNS 13, 14, C15 & C16)
(SEE NOTE 15)

ARM ATTACHMENTS/
DTI WASHER PLACEMENT

STANDARD CITY OF COLUMBUS MAST ARM

CITY OF COLUMBUS, OHIO DEPARTMENT OF PUBLIC SERVICE DIVISION OF DESIGN AND CONSTRUCTION	STD DWG 4120
Hassan Zahran	5/01/2014
CITY ENGINEER	SHT 6 OF 10

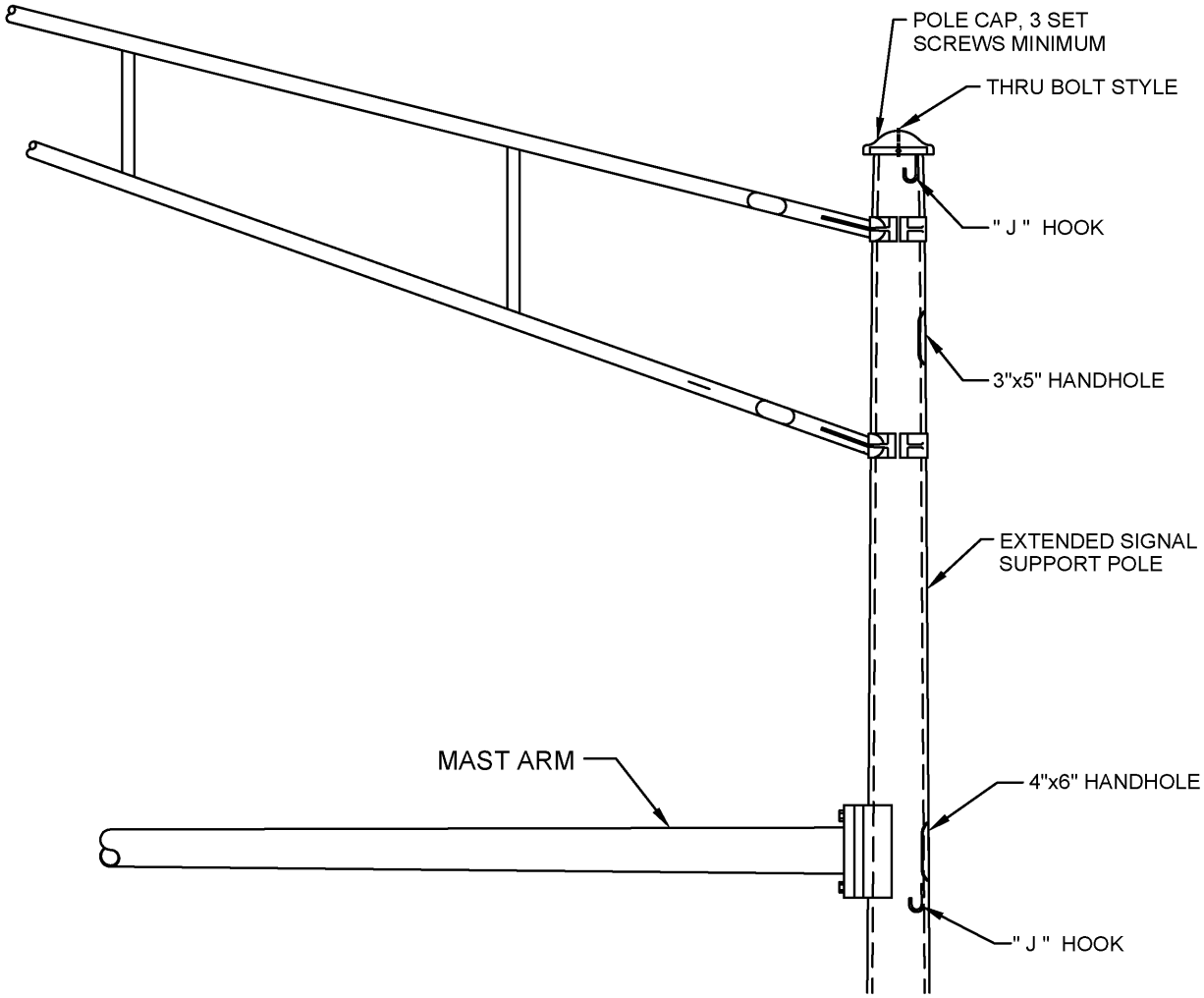

POLE EXTENSION FOR BRACKET ARM

POLE EXTENSION

STANDARD CITY OF COLUMBUS MAST ARM

CITY OF COLUMBUS, OHIO DEPARTMENT OF PUBLIC SERVICE DIVISION OF DESIGN AND CONSTRUCTION	STD DWG 4120
Hassan Zahra	5/01/2014
CITY ENGINEER	SHT 7 OF 10

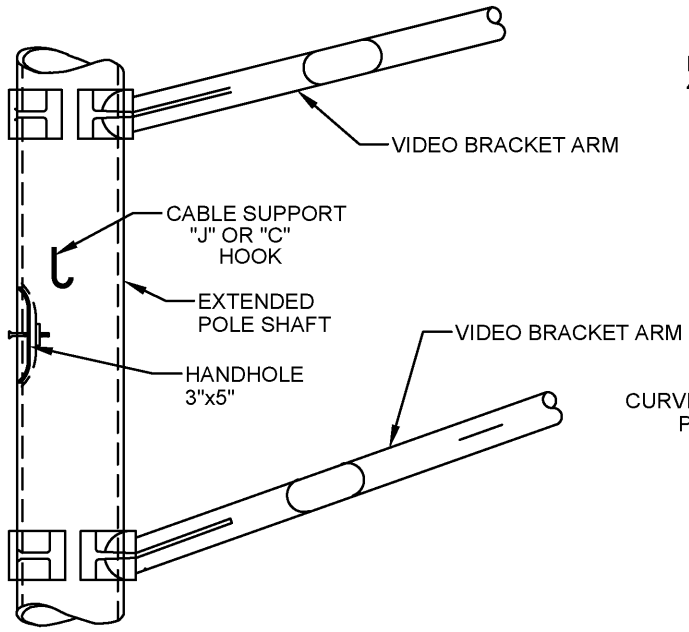

3"x5" HANDHOLE

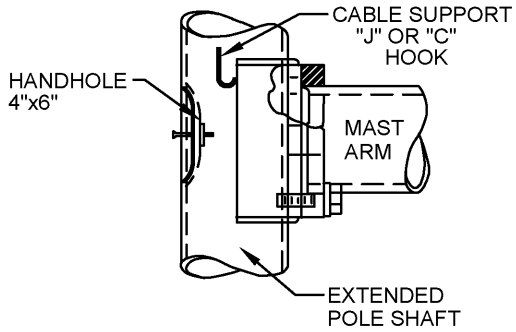

4"x6" HANDHOLE

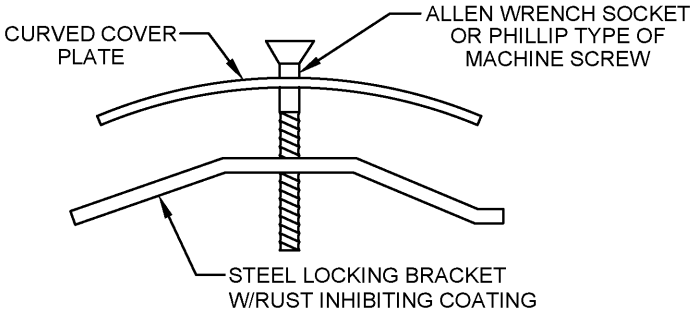

FLUSH HANDHOLE

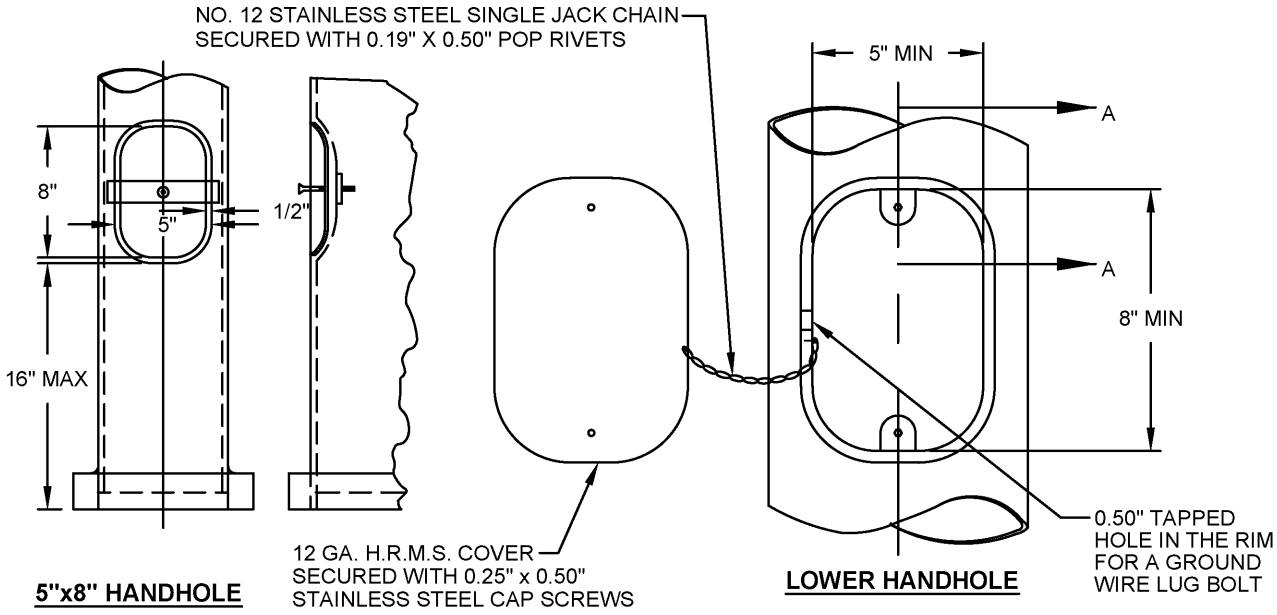

5"x8" HANDHOLE

LOWER HANDHOLE

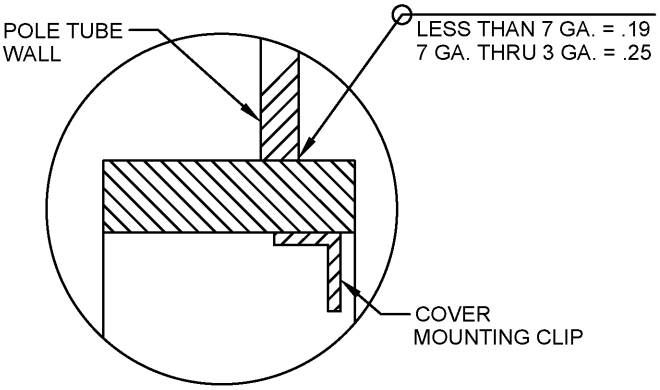

SECTION A-A

HANDHOLE

STANDARD CITY OF COLUMBUS MAST ARM

CITY OF COLUMBUS, OHIO
DEPARTMENT OF PUBLIC SERVICE
DIVISION OF DESIGN AND CONSTRUCTION

STD DWG
4120

5/01/2014

CITY ENGINEER

SHT 8 OF 10

NOTES:

1. ARM PLATE HOLE DIAMETER SHALL BE BOLT DIAMETER PLUS 1 /8" POLE PLATE TAPPED HOLE SHALL HAVE THREADS WITH 75% (MIN.) FULL PROFILE HEIGHT. THREADS MAY BE RETAPPED AFTER GALVANIZING. (SEE SHEET 5.)

2. FOR SIGN MOUNTING DETAILS, SEE CITY OF COLUMBUS STANDARD CONSTRUCTION DRAWING 4251 AND 4252.

3. FOR FOUNDATION DETAILS, SEE CITY OF COLUMBUS STANDARD CONSTRUCTION DRAWING 4160.

4. THE ARM ATTACHMENT PLATE SHALL BE WELDED USING A FULL PENETRATION WELD. THE POLE ATTACHMENT TO THE BASE PLATE SHALL BE WELDED USING A FULL PENETRATION WELD. (SEE SHEET 3 AND 5.)

5. FOR SIGNAL ATTACHMENT DETAILS, SEE CITY OF COLUMBUS STANDARD CONSTRUCTION DRAWING 4201.

6. FOR BRACKET ARM DETAILS, SEE CITY OF COLUMBUS STANDARD CONSTRUCTION DRAWINGS 4110.

7. A MINIMUM OF ONE BOLT THREAD SHALL REMAIN ABOVE THE ANCHOR NUT. (SEE SHEET 3.)

8. ALL UNUSED COUPLINGS SHALL BE PROVIDED WITH A REMOVABLE GALVANIZED CAST IRON PLUG.

9. FOR POLE AND BASE PLATE DIMENSIONS, SEE TABLES 1A AND 1B. (SEE SHEET 2.)

10. WHEN FREE SWINGING VEHICULAR SIGNAL HEADS ARE PERMITTED, THE WIRE ENTRANCE PART OF THE SIGNAL HEAD MAY BE ORIENTED IN ANY DIRECTION TO KEEP THE CABLE DRIP LOOP FROM RUBBING ON THE SIGNAL HEAD. THE SIGNAL HEAD SHALL HANG LEVEL AND PLUMB. (SEE CITY OF COLUMBUS STANDARD CONSTRUCTION DRAWING 4201.)

11. FOR DETAILS AND LOCATION OF HAND HOLES, SEE FLUSH HAND HOLE AND OPTIONAL HAND HOLE DETAILS. (SEE SHEET 8.)

12. THE DESIGN LOADS WERE CALCULATED AS THE EQUIVALENT AMOUNT OF SIGNAL AREA THAT COULD BE CARRIED AT THE END OF THE ARM.

13. THE DESIGN LOADS WERE DEVELOPED WITHOUT APPLYING GALLOPING FATIGUE LOADS. ALSO, THE STRESS REQUIREMENTS OF NOTE B, TABLE 11-2 IN THE AASHTO CODE WERE NOT APPLIED.

14. THESE STRUCTURES SHOULD BE INSPECTED FOR EXCESSIVE WIND INDUCED DEFLECTION IN THE VERTICAL DIRECTION. IF FOUND, A DAMPING DEVICE SHOULD BE PLACED ON THE ARM.

15. MAST ARM CONNECTION BOLTS SHALL BE ASTM A325 FOR DIAMETERS 1.50" AND SMALLER. BOLTS LARGER THAN DIAMETER 1.50" SHALL BE ASTM A449. DESIGNS 4 THROUGH 12 SHALL USE ASTM F436 FLAT WASHERS. DESIGN 13 AND C16 SHALL USE ASTM F959 DTI WASHERS. DESIGN 14 AND C15 SHALL USE ASTM F2437 TYPE 2 GRADE 5 DTI WASHERS. IF NECESSARY, I.D. OF DTI WASHERS SHALL BE GROUND OR REAMED TO FIT PROPERLY OVER ATTACHMENT BOLTS. PROVIDE PROPER DTI FEELER GAUGE TO ENGINEER. AN F436 WASHER SHALL BE USED DIRECTLY UNDER THE HEAD OF THE BOLT WITH ALL DTI WASHERS. ASSURE THAT THE FLAT WASHER DOES NOT SPIN DURING BOLT TIGHTENING WITH DTI WASHER. (SEE SHEET 5 AND 6).

16. AN APPROVED DAMPING DEVICE SHALL BE INSTALLED AS CLOSE AS POSSIBLE TO THE END OF THE ARM. INSTALL IF DIRECTED BY THE PLANS OR THE ENGINEER. FLAT PLATE DAMPERS SHALL ONLY BE USED FOR NEW CONSTRUCTION IF DIRECTED BY THE PLANS OR THE ENGINEER. (SEE SHEET 1.) (SEE STD DWG 4122 FOR VIBRATION MITIGATION DEVICE.)

17. RING-STIFFENED WRAP-AROUND HORIZONTAL PLATES ARE PERMITTED AS AN ALTERNATIVE TO THE HORIZONTAL PLATES SHOWN. (SEE SHEETS 5.)

18. PRODUCT SHOP DRAWINGS FOR ALL ITEMS SHALL BE SUBMITTED FOR APPROVAL TO THE CITY OF COLUMBUS.

19. THE STRUCTURAL INTEGRITY OF ALL PRODUCTS SHALL TAKE PRECEDENCE OVER STATED DESIGN DIMENSIONS IF THESE DIMENSIONS IN THE OPINION OF THE MANUFACTURER NEED TO BE INCREASED FOR THAT MANUFACTURER'S PRODUCT TO MEET THE REQUIRED DESIGN LOADING REQUIREMENTS. THE MANUFACTURER SHALL SUBMIT DESIGN CHANGES TO THE CITY OF COLUMBUS FOR REVIEW AND APPROVAL. THE STATED DIMENSIONS ARE SHOWN TO ALLOW FLEXIBILITY IN FUTURE PART REPLACEMENTS AND TO CREATE A STANDARD FOR THE INTERCHANGEABILITY OF PARTS WITHIN THE CITY OF COLUMBUS.

20. ALL PRE-DRILLED HOLES FOR ALL BID ITEMS SHALL BE DEBURRED AND FREE OF ALL SHARP EDGES. ALL OUTSIDE WELDS ON MAST ARM STRUCTURES AND TRAFFIC PEDESTAL STRUCTURES SHALL BE ROLLED OR GROUND SMOOTH. ALL INSIDE WELDS ON MAST ARM STRUCTURES AND TRAFFIC PEDESTAL STRUCTURES SHALL BE VOID OF SHARP EDGES.

21. NO FOUNDATION BOLT PATTERN CHANGE SHALL BE ALLOWED FOR THE POLE SHAFT BASE PLATE. THE POLE BASE PLATE MUST FIT THE GIVEN FOUNDATION BOLT PATTERN AS SHOWN ON CITY OF COLUMBUS STANDARD CONSTRUCTION DRAWING 4160.

STANDARD CITY OF COLUMBUS MAST ARM

CITY OF COLUMBUS, OHIO
DEPARTMENT OF PUBLIC SERVICE
DIVISION OF DESIGN AND CONSTRUCTION

STD DWG
4120

Hassan Zahran

5/01/2014

CITY ENGINEER

SHT 9 OF 10

22. SIGNAL SUPPORTS SHALL BE HOT DIPPED GALVANIZED AND COATED IN ACCORDANCE WITH THE PLANS.

23. SUPPORTS SHALL HAVE 1, 2, OR 3 HAND HOLES, AS PER PLAN DESIGN, EACH COMPLETE WITH A COVER, A RECTANGULAR OR ELLIPTICAL REINFORCED FRAME, AND A STAINLESS STEEL FASTENER FOR THE COVER. THE FASTENER SHALL BE FLUSH WITH THE HAND HOLE SURFACE. THE HAND HOLES SHALL BE LOCATED 180 DEGREES FROM THE MAST ARM UNLESS SPECIFIED OTHERWISE. (SEE SHEET 8.)

    A.) THE HAND HOLE NEAR THE VIDEO BRACKET ARM SHALL HAVE A MINIMUM INSIDE OPENING OF 3" X 5" AND BE SIMILAR IN DESIGN TO THE BOTTOM HAND HOLE EXCEPT THAT NO GROUNDING PROVISION IS REQUIRED.

    B.) THE HAND HOLE NEAR THE ARM ATTACHMENT SHALL HAVE A MINIMUM INSIDE OPENING OF 4" X 6" AND BE SIMILAR IN DESIGN TO THE BOTTOM HAND HOLE EXCEPT THAT NO GROUNDING PROVISION IS REQUIRED.

    C.) THE BOTTOM HAND HOLE SHALL HAVE A MINIMUM INSIDE OPENING OF 5" X 8". A GROUNDING PROVISION CAPABLE OF ACCEPTING 4 - #4 AWG COPPER GROUNDING WIRES SHALL BE PROVIDED AND SHALL BE ATTACHED TO THE FRAME.

24. SUPPORT SHALL HAVE A REMOVABLE POLE CAP ATTACHED EITHER BY A MINIMUM OF 3 STAINLESS STEEL SET SCREWS OR BY A STAINLESS STEEL THROUGH BOLT. (SEE SHEET 7.)

25. SUPPORTS SHALL HAVE A STEEL POLE BASE PLATE/ANCHOR BOLT-NUT COVER (1/4" THICK SQUARE PLATE, TWO PIECE CONSTRUCTION, GALVANIZED TO ASTM A123 THEN COATED) THAT SKIRTS THE BOLTS, NUTS AND BASE PLATE. ALL SCREW HOLES SHALL BE PRE-DRILLED AND STAINLESS STEEL FASTENERS SHALL BE USED. (SEE SHEET 4.)

26. SUPPORTS SHALL HAVE 1, 2, OR 3 WELDED CABLE SUPPORT HOOKS ('J' OR 'C' HOOKS) LOCATED ON THE INSIDE OF THE POLE AND 90 DEGREES FROM THE MAST ARM. (SEE SHEET 7.)

27. THE ARM SHALL MAINTAIN A CIRCULAR CROSS-SECTION (CONSTANT CROSS-SECTIONAL RADIUS).

28. THE ARM SHALL HAVE A REMOVABLE END-OF-ARM CAP ATTACHED BY A MINIMUM OF 3 STAINLESS STEEL SET SCREWS. THIS WILL BE THE ONLY ATTACHMENT METHOD ACCEPTABLE. THE INSIDE DIAMETER OF THE END-OF-ARM CAP SHALL BE EQUAL TO THE END-OF-ARM OUTSIDE DIAMETER PLUS TWO TIMES THE ARM TAPER.

29. THE ARM SHALL NOT HAVE PRE-DRILLED HOLES FOR SIGNAL HEAD CABLE ENTRY. THE CONTRACTOR SHALL FIELD DRILL THESE HOLES.

30. THE SUPPORTS SHALL BE DESIGNED USING THE 2009 EDITION OF THE AASHTO STANDARD SPECIFICATIONS FOR HIGHWAY SIGNS, LUMINAIRES, AND TRAFFIC SIGNALS. THE FOLLOWING CRITERIA SHALL BE USED FOR THE DESIGN: BASIC WIND SPEED - 90 MPH, DESIGN LIFE - 25 YEARS, FATIGUE CATEGORY III. ADDITIONALLY, THE SUPPORT DESIGNS SHALL NOT INCLUDE GALLOPING OR TRUCK INDUCED GUST LOADING.

STANDARD CITY OF COLUMBUS MAST ARM

CITY OF COLUMBUS, OHIO DEPARTMENT OF PUBLIC SERVICE DIVISION OF DESIGN AND CONSTRUCTION	STD DWG 4120
Hassan Zahran	5/01/2014
CITY ENGINEER	SHT 10 OF 10

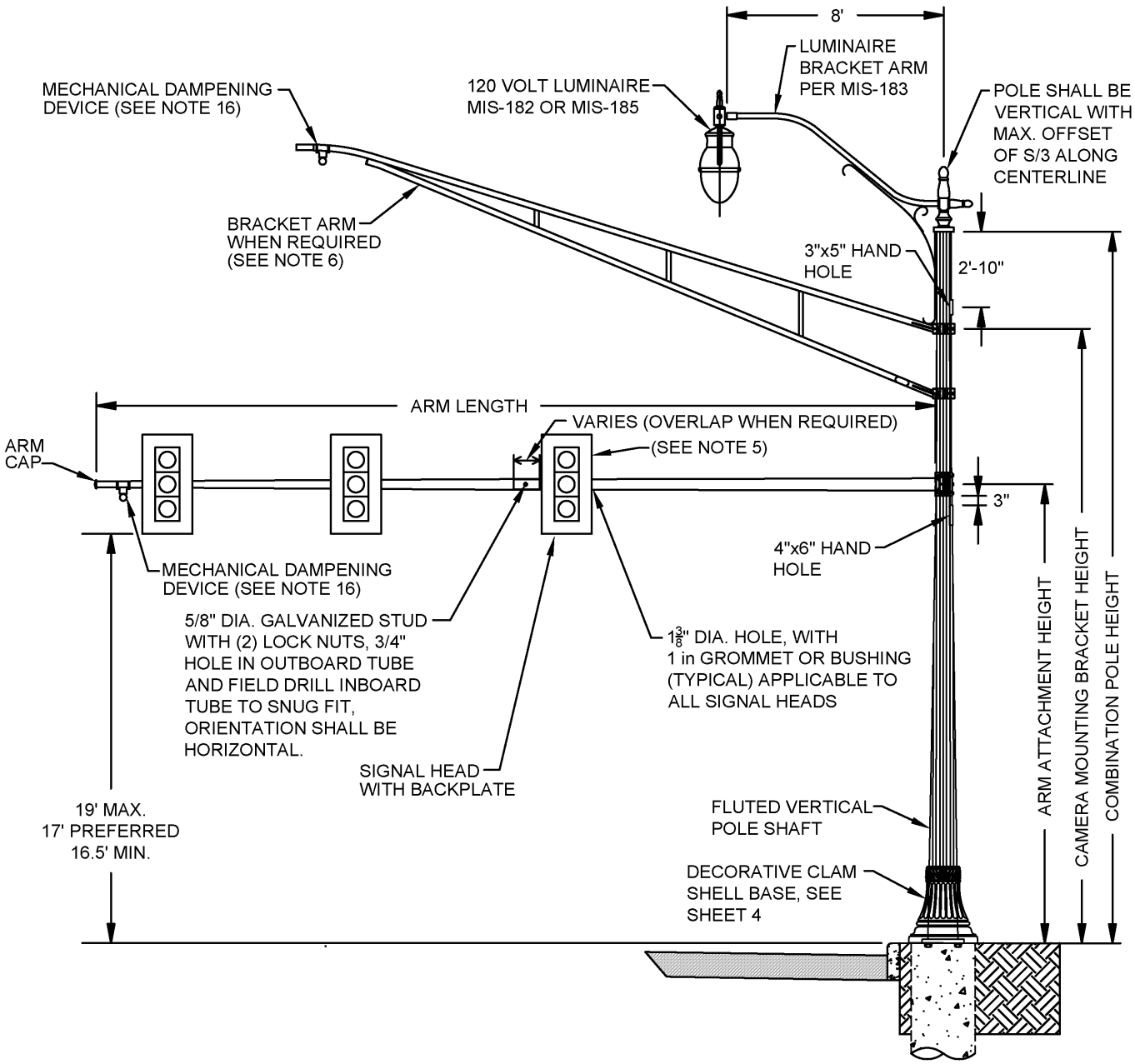

DECORATIVE CITY OF COLUMBUS MAST ARM

CITY OF COLUMBUS, OHIO DEPARTMENT OF PUBLIC SERVICE DIVISION OF DESIGN AND CONSTRUCTION	STD DWG 4121
Hassan Zahra	5/01/2014
CITY ENGINEER	SHT 1 OF 9

TABLE 1 - PART A - POLE DIMENSIONS

DESIGN NO.	MAXIMUM DESIGN AREA SQ FT (NOTE A)	DESIGN DISTANCE FROM CL FT	POLE			ARM		TWO PIECE ARM		
			TYPE	WALL THICK	SIZE	WALL THICK	SIZE	TYPE	WALL THICK	SIZE
4	42	37.5	16-FLUTES	.250	13.00x8.94x29'	.250	10.50x5.18x38'	ROUND		
12	42	47.5	16-FLUTES	.250	14.50x10.44x29'	TOT. LENGTH = 48'		ROUND	.250	11.50x7.72x27' +
									.179	8.33x5.18x22.5'
13	40	59.5	16-FLUTES	.250	16.00x11.94x29'	TOT. LENGTH = 60'		ROUND	.313	11.50x7.72x27' +
									.179	8.33x3.47x34'
14	38	69.5	16-FLUTES	.313	15.50x11.44x29'	TOT. LENGTH = 70'		ROUND	.313	12.75x8.41x31' +
									.179	9.05x3.31x41'
C15	50	78.5	16-FLUTES	.313	18.00x13.94x29'	TOT. LENGTH = 79'		ROUND	.313	14.25x8.65x40' +
									.250	9.44x3.70x41'
C16 (DOUBLE ARM)	48 / 48	49.5 49.5	16-FLUTES	.313	15.50x11.30x30'	TOT. LENGTH = 50' / 50'		ROUND	.250	12.00x9.62x17' +
									.179	10.26x5.40x34.75'
									.250	12.00x9.62x17' +
									.179	10.26x5.40x34.75'

ALL DIMENSIONS ARE IN INCHES, UNLESS OTHERWISE NOTED.

TABLE 1 - PART B - POLE DIMENSIONS

DESIGN NO.	ARM ATTACHMENT									ANCHOR BASE							ANCHOR BOLT	
	A1	A2	B	C	D	E	F	G	U	BOLT CIRCLE	S	J	K	T	R	H	DIA.	L
4	17.5	19.5	17.5	14	14	1.5	1.25	1.25	10	18	18.5	12.75	6	2	2	2.13	1.75	84
12	19	21	19	15	15	1.5	1.25	1.25	11	20	20.5	14.13	6	2	2	2.38	2	90
13	21	23	21	17	17	2	1.5	1.5	13	22	23	15.56	6	2	3.5	2.38	2	90
14	21	23	21	17	17	2	1.5	1.5	13	22	23	15.56	6	2	3.5	2.38	2	90
C15	25	27	25	20	20	2	2	2	16	24	24	17	8	2	2	2.38	2	90
C16 (DOUBLE ARM)	21	23	21	17	17	2	1.5	1.5	13	22	23	15.56	6	2	3.5	2.38	2	90
	21	23	21	17	17	2	1.5	1.5	13									

ALL DIMENSIONS ARE IN INCHES, UNLESS OTHERWISE NOTED.

THESE DESIGNS USE FULL PENETRATION WELDS AT THE ARM AND BASE PLATE CONNECTIONS.

NOTES:

A. MAXIMUM DESIGN AREA IS BASED ON 90 MPH DESIGN WIND SPEED WITH A PRESSURE OF 25 PSF.

B. DIMENSION LOCATIONS ARE ILLUSTRATED ON SHEETS 3 & 5.

DECORATIVE CITY OF COLUMBUS MAST ARM

CITY OF COLUMBUS, OHIO
DEPARTMENT OF PUBLIC SERVICE
DIVISION OF DESIGN AND CONSTRUCTION

Hassan Zahran

CITY ENGINEER

STD DWG
4121

5/01/2014

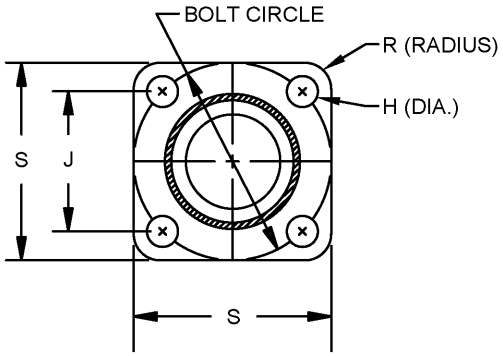

BASE PLATE

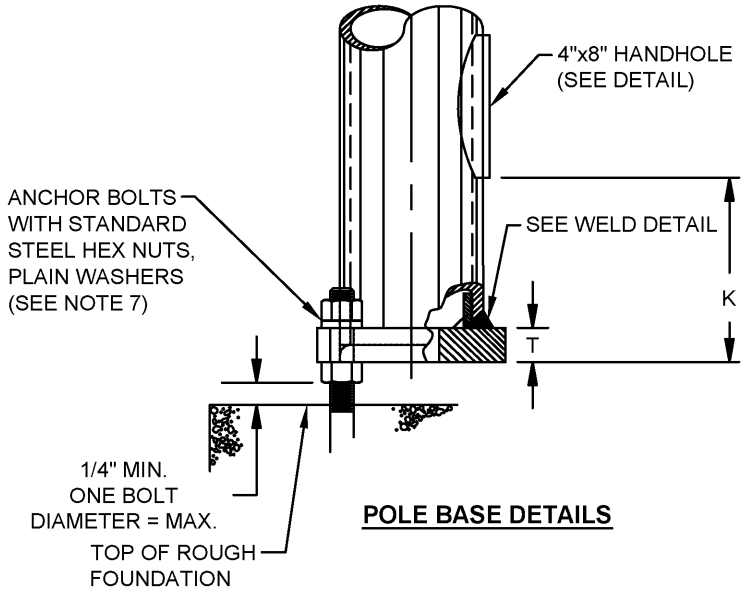

POLE BASE DETAILS

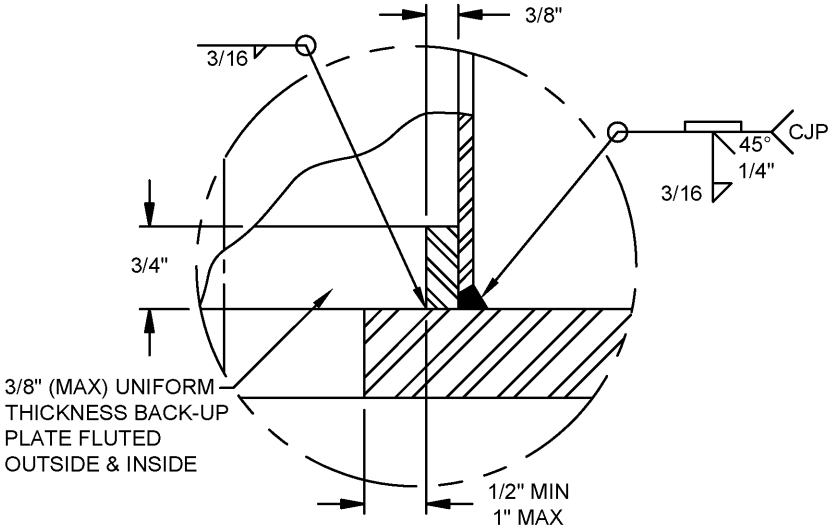

POLE BASE FLANGE WELD DETAIL

BASE CONNECTION

DECORATIVE CITY OF COLUMBUS MAST ARM

CITY OF COLUMBUS, OHIO
DEPARTMENT OF PUBLIC SERVICE
DIVISION OF DESIGN AND CONSTRUCTION

STD DWG
4121

5/01/2014

CITY ENGINEER

SHT 3 OF 9

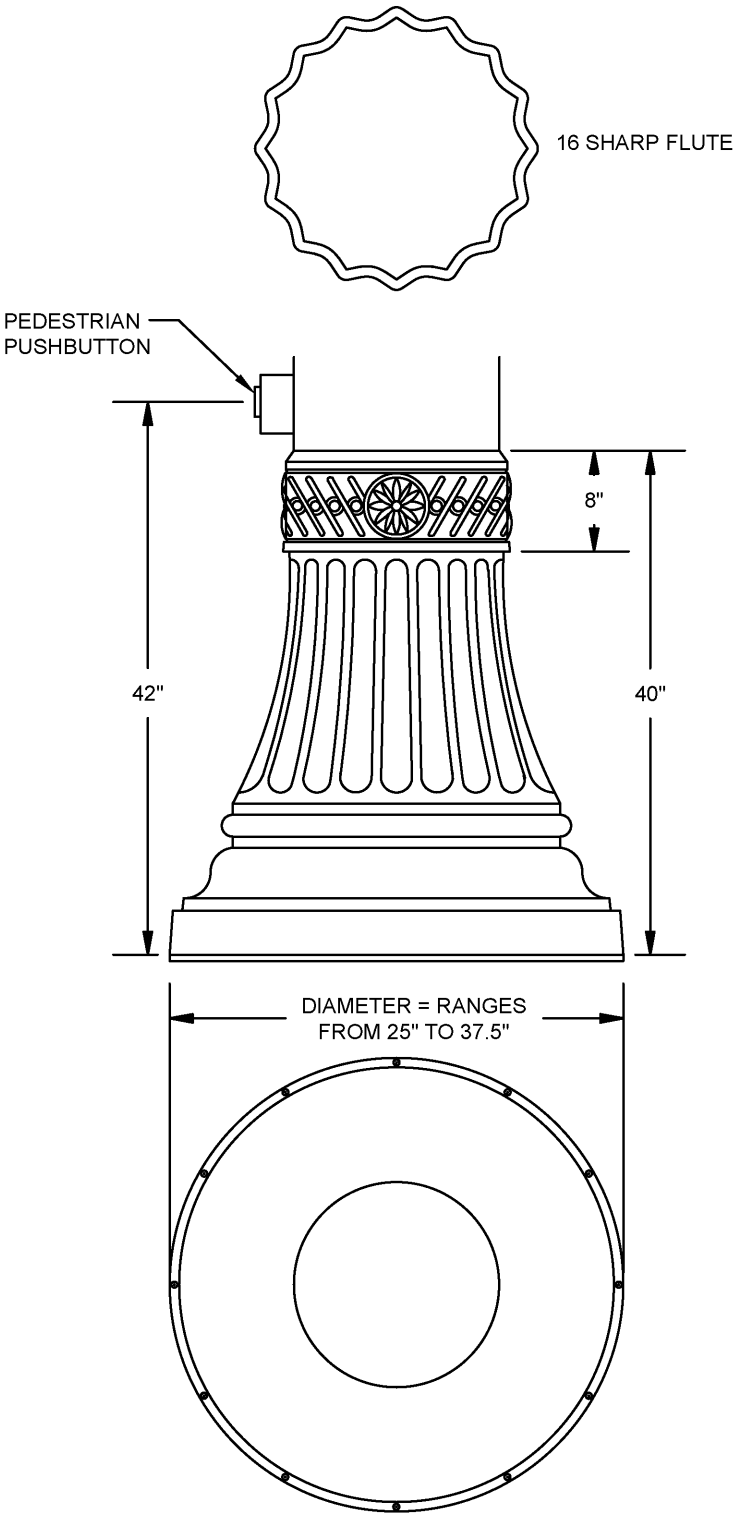

DECORATIVE BASE

NOTES:

THE HANDHOLE IN DECORATIVE BASE SHALL BE ALIGNED WITH THE HANDHOLE IN THE SUPPORT POLE.

DECORATIVE BASE MATERIAL SHALL BE AS SPECIFIED PER PLAN.

DECORATIVE CITY OF COLUMBUS MAST ARM

CITY OF COLUMBUS, OHIO
DEPARTMENT OF PUBLIC SERVICE
DIVISION OF DESIGN AND CONSTRUCTION

STD DWG
4121

5/01/2014

CITY ENGINEER

SHT 4 OF 9

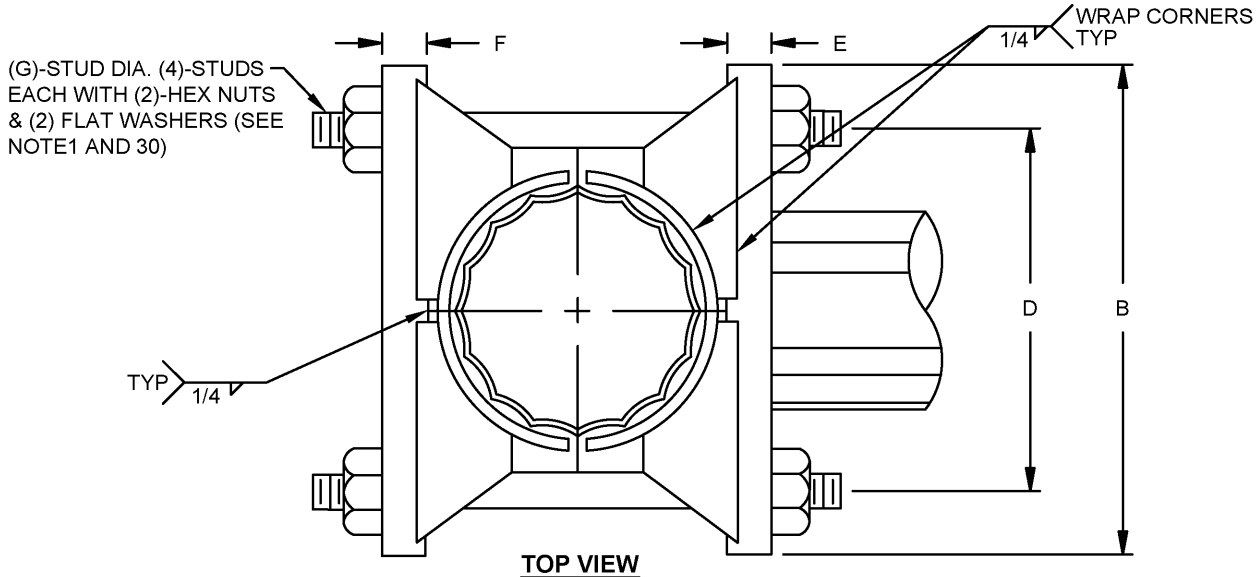

TOP VIEW

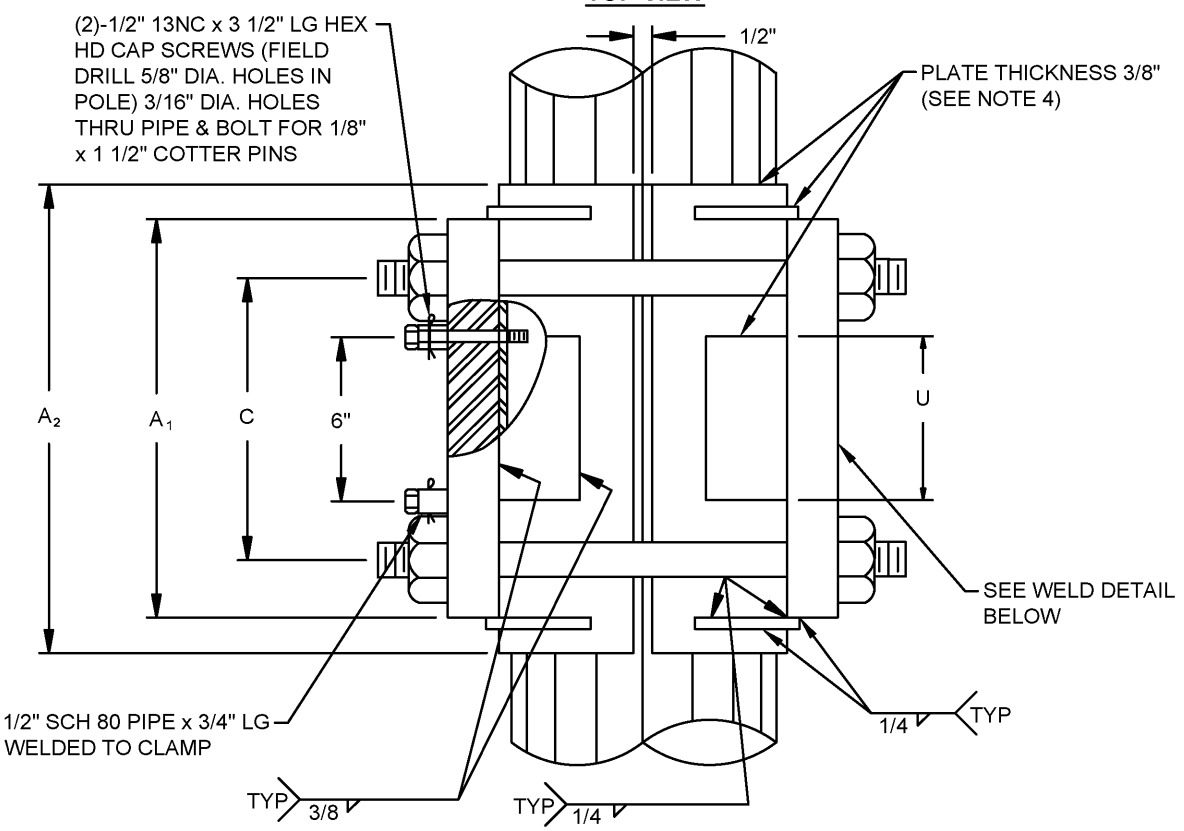

SECTION VIEW

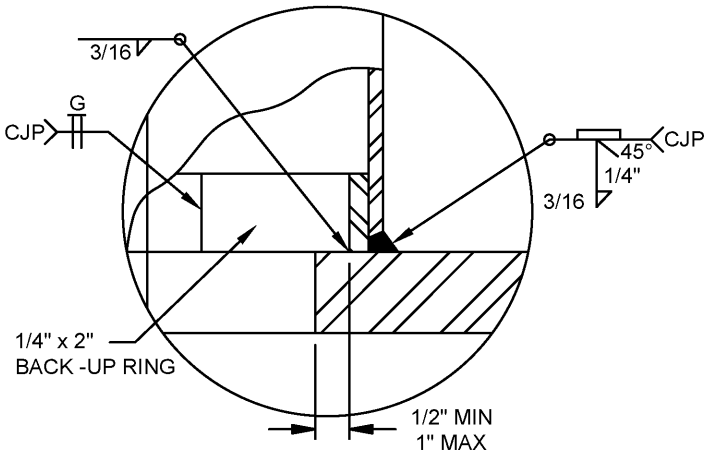

ARM FLANGE WELD DETAIL

MAST ARM CLAMP CONNECTION

DECORATIVE CITY OF COLUMBUS MAST ARM

CITY OF COLUMBUS, OHIO
DEPARTMENT OF PUBLIC SERVICE
DIVISION OF DESIGN AND CONSTRUCTION

STD DWG
4121

5/01/2014

CITY ENGINEER

SHT 5 OF 9

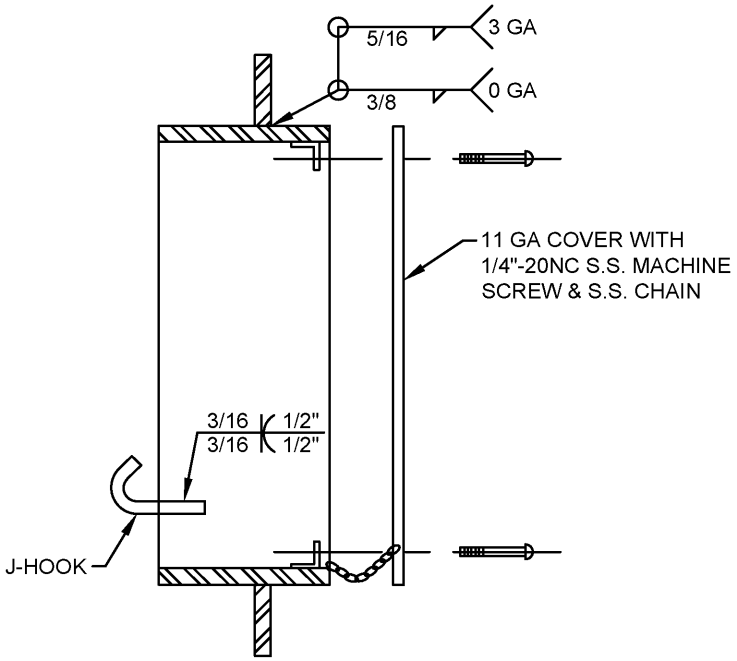

SECTION A-A

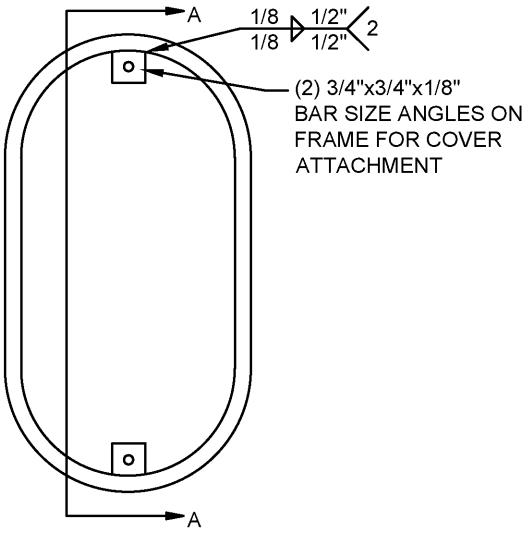

FRONT VIEW

3" x 5" HANDHOLE NEAR BRACKET ARM FRAME DETAIL
4" x 6" HANDHOLE NEAR MAST ARM FRAME DETAIL

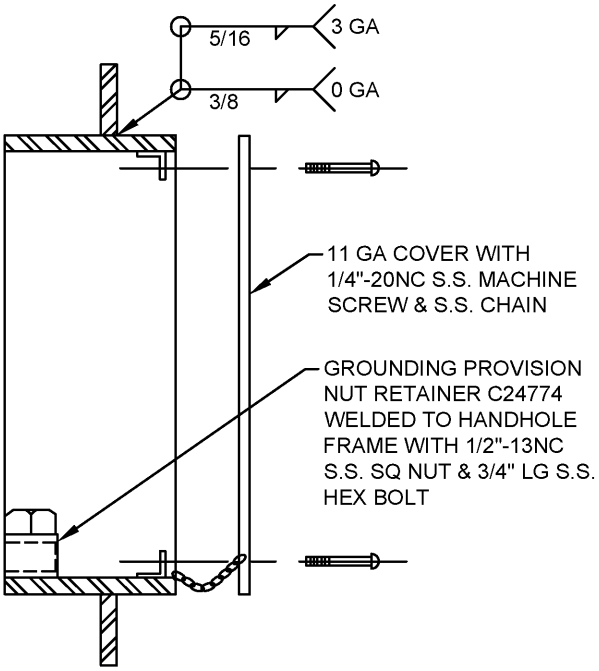

SECTION A-A

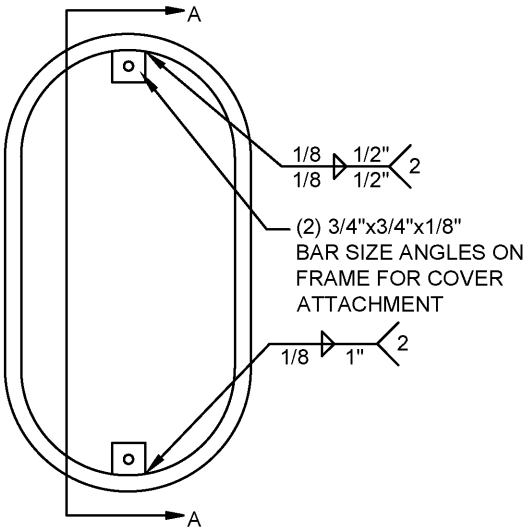

FRONT VIEW

4" x 8" BOTTOM HANDHOLE FRAME DETAIL

HANDHOLE

DECORATIVE CITY OF COLUMBUS MAST ARM

CITY OF COLUMBUS, OHIO
DEPARTMENT OF PUBLIC SERVICE
DIVISION OF DESIGN AND CONSTRUCTION

STD DWG
4121

5/01/2014

CITY ENGINEER

SHT 6 OF 9

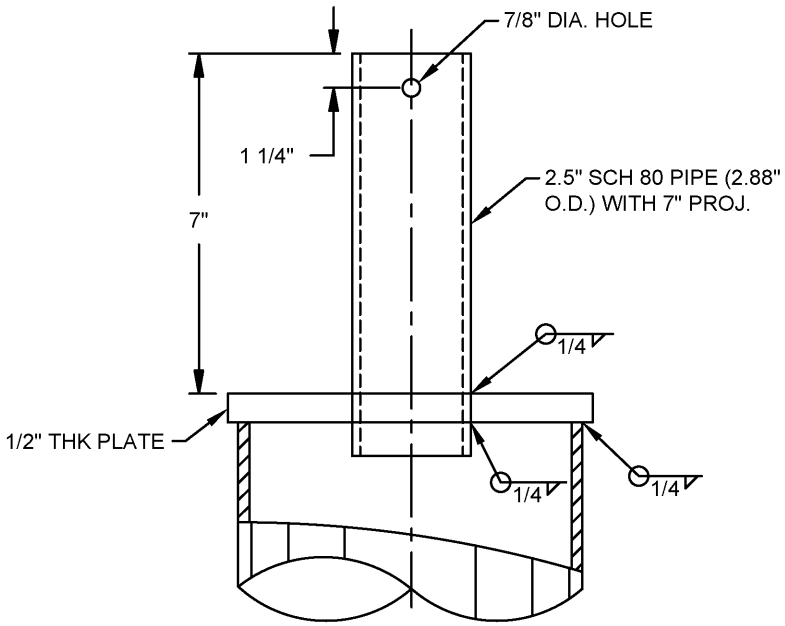

TOP OF POLE DETAIL
(FOR POLES WITH LUMINAIRE ONLY)

LUMINAIRE BRACKET ARM NOT SHOWN FOR CLARITY. SEE MIS-183 FOR ADDITIONAL DETAILS.

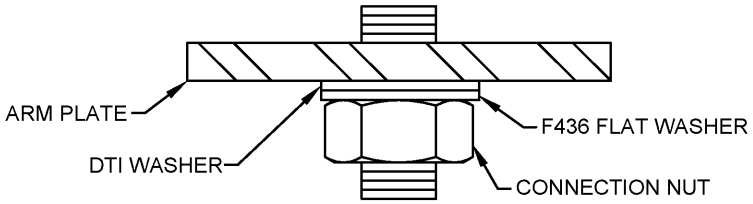

DTI WASHER PLACEMENT
(FOR DESIGNS 13, 14, C15 & C16)
(SEE NOTE 30)

POLE TENON / DTI WASHER PLACEMENT

DECORATIVE CITY OF COLUMBUS MAST ARM

CITY OF COLUMBUS, OHIO DEPARTMENT OF PUBLIC SERVICE DIVISION OF DESIGN AND CONSTRUCTION	STD DWG 4121
Hassan Zahran	5/01/2014
CITY ENGINEER	SHT 7 OF 9

NOTES:

1. ARM PLATE HOLE DIAMETER SHALL BE BOLT DIAMETER PLUS 1 /8". (SEE SHEET 1)

2. FOR SIGN MOUNTING DETAILS, SEE CITY OF COLUMBUS STANDARD CONSTRUCTION DRAWING 4251 AND 4252.

3. FOR FOUNDATION DETAILS, SEE CITY OF COLUMBUS STANDARD CONSTRUCTION DRAWING 4160.

4. THE ARM ATTACHMENT PLATE SHALL BE WELDED USING A FULL PENETRATION WELD. THE POLE ATTACHMENT TO THE BASE PLATE SHALL BE WELDED USING A FULL PENETRATION WELD. (SEE SHEETS 3 AND 5.)

5. FOR SIGNAL ATTACHMENT DETAILS, SEE CITY OF COLUMBUS STANDARD CONSTRUCTION DRAWING 4201.

6. FOR BRACKET ARM DETAILS, SEE CITY OF COLUMBUS STANDARD CONSTRUCTION DRAWINGS 4110.

7. A MINIMUM OF ONE BOLT THREAD SHALL REMAIN ABOVE THE ANCHOR NUT. (SEE SHEET 3.)

8. ALL UNUSED COUPLINGS SHALL BE PROVIDED WITH A REMOVABLE GALVANIZED CAST IRON PLUG.

9. FOR POLE AND BASE PLATE DIMENSIONS, SEE TABLES 1A AND 1B. (SEE SHEET 2.)

10. WHEN FREE SWINGING VEHICULAR SIGNAL HEADS ARE PERMITTED, THE WIRE ENTRANCE PART OF THE SIGNAL HEAD MAY BE ORIENTED IN ANY DIRECTION TO KEEP THE CABLE DRIP LOOP FROM RUBBING ON THE SIGNAL HEAD. THE SIGNAL HEAD SHALL HANG LEVEL AND PLUMB. (SEE CITY OF COLUMBUS STANDARD CONSTRUCTION DRAWING 4201.)

11. FOR DETAILS AND LOCATION OF HAND HOLES, SEE FLUSH HAND HOLE AND OPTIONAL HAND HOLE DETAILS. (SEE SHEETS 1 AND 6.)

12. THE DESIGN LOADS WERE CALCULATED AS THE EQUIVALENT AMOUNT OF SIGNAL AREA THAT COULD BE CARRIED AT THE END OF THE ARM.

13. THE DESIGN LOADS WERE DEVELOPED WITHOUT APPLYING GALLOPING FATIGUE LOADS. ALSO, THE STRESS REQUIREMENTS OF NOTE B, TABLE 11-2 IN THE AASHTO CODE WERE NOT APPLIED.

14. THESE STRUCTURES SHOULD BE INSPECTED FOR EXCESSIVE WIND INDUCED DEFLECTION IN THE VERTICAL DIRECTION. IF FOUND, A DAMPING DEVICE SHOULD BE PLACED ON THE ARM.

15. AN APPROVED DAMPING DEVICE SHALL BE INSTALLED AS CLOSE AS POSSIBLE TO THE END OF THE ARM. INSTALL IF DIRECTED BY THE PLANS OR THE ENGINEER. FLAT PLATE DAMPERS SHALL ONLY BE USED FOR NEW CONSTRUCTION IF DIRECTED BY THE PLANS OR THE ENGINEER. (SEE SHEET 1.)

16. A TENON SHALL BE PROVIDED TO ACCOMMODATE THE LUMINAIRE BRACKET ARM. (SEE SHEET 7).

17. PRODUCT SHOP DRAWINGS FOR ALL ITEMS SHALL BE SUBMITTED FOR APPROVAL TO THE CITY OF COLUMBUS.

18. THE STRUCTURAL INTEGRITY OF ALL PRODUCTS SHALL TAKE PRECEDENCE OVER STATED DESIGN DIMENSIONS IF THESE DIMENSIONS IN THE OPINION OF THE MANUFACTURER NEED TO BE INCREASED FOR THAT MANUFACTURER'S PRODUCT TO MEET THE REQUIRED DESIGN LOADING REQUIREMENTS. THE MANUFACTURER SHALL SUBMIT DESIGN CHANGES TO THE CITY OF COLUMBUS FOR REVIEW AND APPROVAL. THE STATED DIMENSIONS ARE SHOWN TO ALLOW FLEXIBILITY IN FUTURE PART REPLACEMENTS AND TO CREATE A STANDARD FOR THE INTERCHANGEABILITY OF PARTS WITHIN THE CITY OF COLUMBUS.

19. ALL PRE-DRILLED HOLES FOR ALL BID ITEMS SHALL BE DEBURRED AND FREE OF ALL SHARP EDGES. ALL OUTSIDE WELDS ON MAST ARM STRUCTURES AND TRAFFIC PEDESTAL STRUCTURES SHALL BE ROLLED OR GROUND SMOOTH. ALL INSIDE WELDS ON MAST ARM STRUCTURES AND TRAFFIC PEDESTAL STRUCTURES SHALL BE VOID OF SHARP EDGES.

20. NO FOUNDATION BOLT PATTERN CHANGE SHALL BE ALLOWED FOR THE POLE SHAFT BASE PLATE. THE POLE BASE PLATE MUST FIT THE GIVEN FOUNDATION BOLT PATTERN AS SHOWN ON CITY OF COLUMBUS STANDARD CONSTRUCTION DRAWING 4160.

DECORATIVE CITY OF COLUMBUS MAST ARM

CITY OF COLUMBUS, OHIO DEPARTMENT OF PUBLIC SERVICE DIVISION OF DESIGN AND CONSTRUCTION	STD DWG 4121
Hassan Zahran	5/01/2014
CITY ENGINEER	SHT 8 OF 9

21. SIGNAL SUPPORTS SHALL BE HOT DIPPED GALVANIZED AND COATED IN ACCORDANCE WITH THE PLANS.

22. SUPPORTS SHALL HAVE 1, 2, OR 3 HAND HOLES, AS PER PLAN DESIGN, EACH COMPLETE WITH A COVER, A RECTANGULAR OR ELLIPTICAL REINFORCED FRAME, AND A STAINLESS STEEL FASTENER FOR THE COVER. THE FASTENER SHALL BE FLUSH WITH THE HAND HOLE SURFACE. THE HAND HOLES SHALL BE LOCATED 180 DEGREES FROM THE MAST ARM UNLESS SPECIFIED OTHERWISE. (SEE SHEET 6.)

A.) THE HAND HOLE NEAR THE VIDEO BRACKET ARM SHALL HAVE A MINIMUM INSIDE OPENING OF 3" X 5" AND BE SIMILAR IN DESIGN TO THE BOTTOM HAND HOLE EXCEPT THAT NO GROUNDING PROVISION IS REQUIRED.

B.) THE HAND HOLE NEAR THE ARM ATTACHMENT SHALL HAVE A MINIMUM INSIDE OPENING OF 4" X 6" AND BE SIMILAR IN DESIGN TO THE BOTTOM HAND HOLE EXCEPT THAT NO GROUNDING PROVISION IS REQUIRED.

C.) THE BOTTOM HAND HOLE SHALL HAVE A MINIMUM INSIDE OPENING OF 4" X 8". A GROUNDING PROVISION CAPABLE OF ACCEPTING 4 - #4 AWG COPPER GROUNDING WIRES SHALL BE PROVIDED AND SHALL BE ATTACHED TO THE FRAME.

23. THE VERTICAL POLE SHAFT SHALL HAVE 16 SHARP FLUTES.

24. THE DECORATIVE BASE SHALL BE AS DETAILED ON SHEET 4.

25. SUPPORTS SHALL HAVE 1, 2 OR 3 WELDED CABLE SUPPORT HOOKS ('J' OR 'C' HOOKS) LOCATED ON THE INSIDE OF THE POLE AND 90 DEGREES FROM THE MAST ARM.

26. THE ARM SHALL MAINTAIN A CIRCULAR CROSS-SECTION (CONSTANT CROSS-SECTIONAL RADIUS).

27. THE ARM SHALL HAVE A REMOVABLE END-OF-ARM CAP ATTACHED BY A MINIMUM OF 3 STAINLESS STEEL SET SCREWS. THIS WILL BE THE ONLY ATTACHMENT METHOD ACCEPTABLE. THE INSIDE DIAMETER OF THE END-OF-ARM CAP SHALL BE EQUAL TO THE END-OF-ARM OUTSIDE DIAMETER PLUS TWO TIMES THE ARM TAPER.

28. THE ARM SHALL NOT HAVE PRE-DRILLED HOLES FOR SIGNAL HEAD CABLE ENTRY. THE CONTRACTOR SHALL FIELD DRILL THESE HOLES.

29. THE SUPPORTS SHALL BE DESIGNED USING THE 2009 EDITION OF THE AASHTO STANDARD SPECIFICATIONS FOR HIGHWAY SIGNS, LUMINAIRES, AND TRAFFIC SIGNALS. THE FOLLOWING CRITERIA SHALL BE USED FOR THE DESIGN: BASIC WIND SPEED - 90 MPH, DESIGN LIFE - 25 YEARS, FATIGUE CATEGORY III. ADDITIONALLY, THE SUPPORT DESIGNS SHALL NOT INCLUDE GALLOPING OR TRUCK INDUCED GUST LOADING.

30. MAST ARM CONNECTION BOLTS SHALL BE ASTM A325 FOR DIAMETERS 1.50" AND SMALLER. BOLTS LARGER THAN DIAMETER 1.50" SHALL BE ASTM A449. DESIGNS 4 THROUGH 12 SHALL USE ASTM F436 FLAT WASHERS. DESIGN 13 AND C16 SHALL USE ASTM F959 DTI WASHERS. DESIGN 14 AND C15 SHALL USE ASTM F2437 TYPE 2 GRADE 5 DTI WASHERS. IF NECESSARY, I.D. OF DTI WASHERS SHALL BE GROUND OR REAMED TO FIT PROPERLY OVER ATTACHMENT BOLTS. PROVIDE PROPER DTI FEELER GAUGE TO ENGINEER. AN F436 WASHER SHALL BE USED DIRECTLY UNDER THE HEAD OF THE BOLT WITH ALL DTI WASHERS. ASSURE THAT THE FLAT WASHER DOES NOT SPIN DURING BOLT TIGHTENING WITH DTI WASHER. (SEE SHEETS 5 AND 7).

DECORATIVE CITY OF COLUMBUS MAST ARM

CITY OF COLUMBUS, OHIO DEPARTMENT OF PUBLIC SERVICE DIVISION OF DESIGN AND CONSTRUCTION	STD DWG 4121
Hassan Zahran	5/01/2014
CITY ENGINEER	SHT 9 OF 9

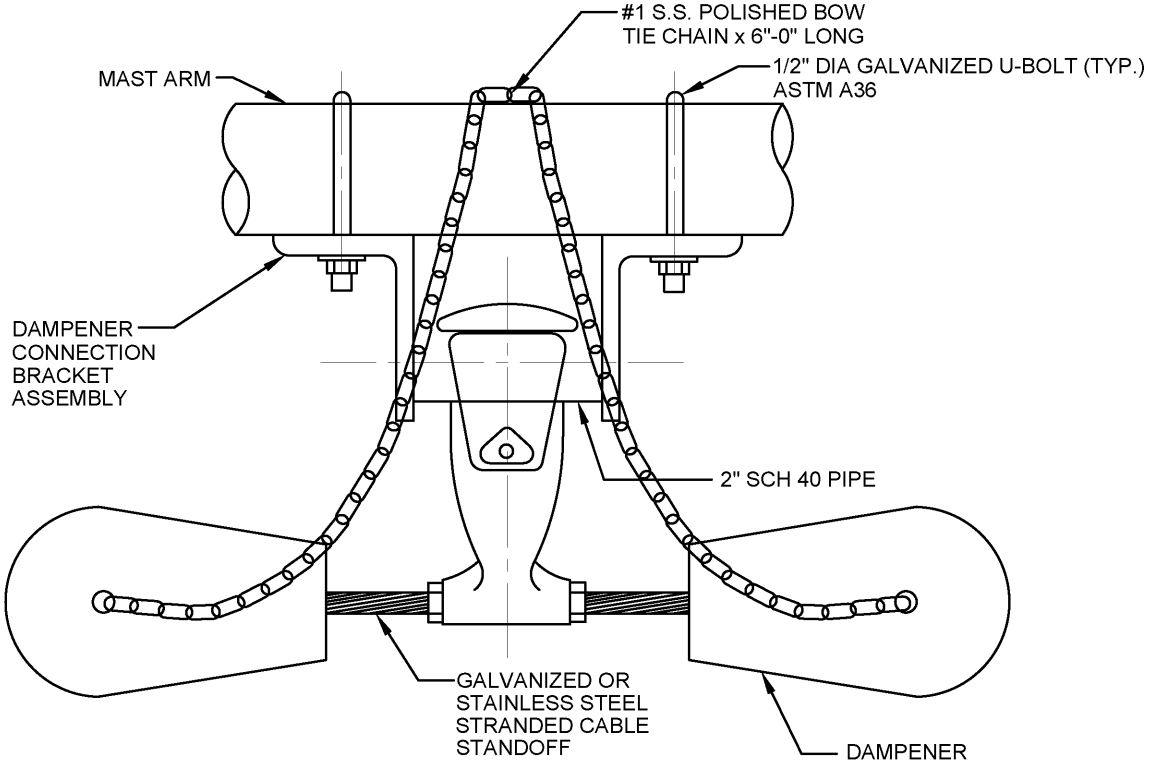

MOUNTED ON MAST ARM
(ALIGNED WITH ARM)

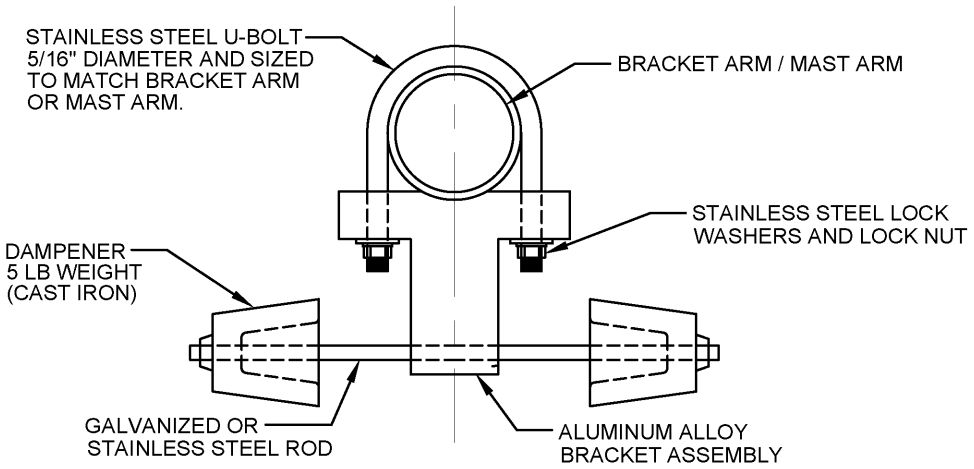

MOUNTED ON CAMERA
BRACKET ARM
(PERPENDICULAR TO ARM)

NOTE:

NON-STAINLESS STEEL ITEMS
SHALL BE COATED TO MATCH
BRACKET / MAST ARM.

MECHANICAL DAMPENING DEVICE

CITY OF COLUMBUS, OHIO DEPARTMENT OF PUBLIC SERVICE DIVISION OF DESIGN AND CONSTRUCTION	STD DWG 4122
Hassan Zahra	5/01/2014
CITY ENGINEER	SHT 1 OF 1

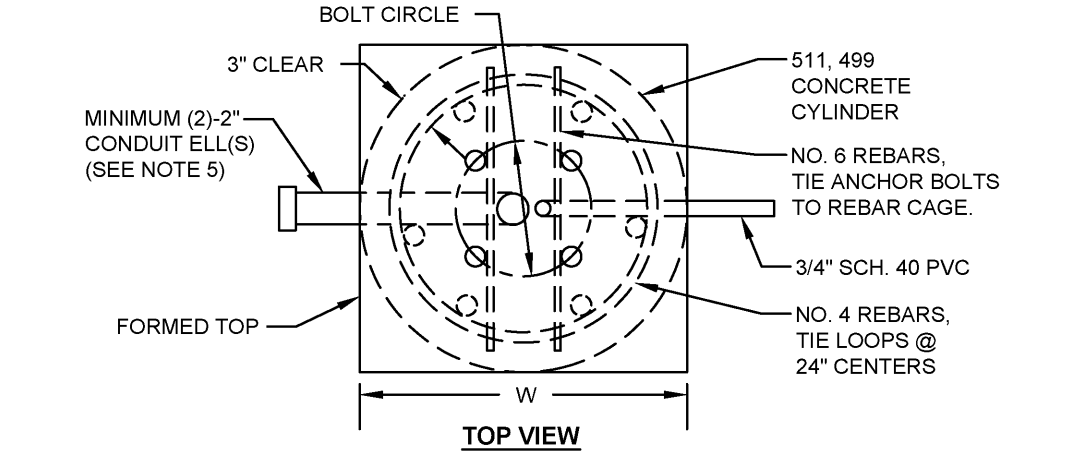

TOP VIEW

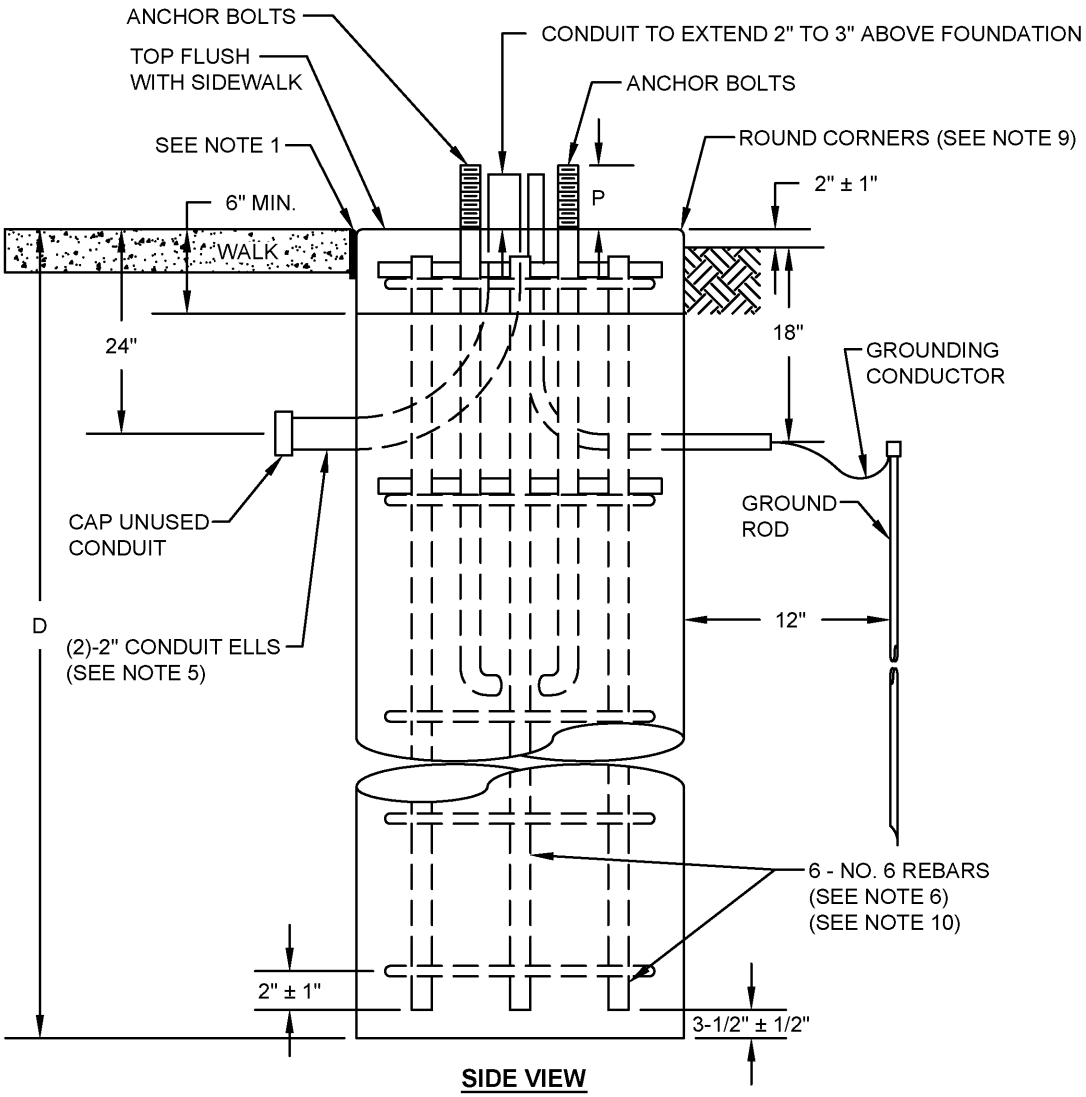

SIDE VIEW

SIGNAL SUPPORT/ STRAIN POLE FOUNDATIONS

CITY OF COLUMBUS, OHIO
DEPARTMENT OF PUBLIC SERVICE
DIVISION OF DESIGN AND CONSTRUCTION

STD DWG
4160

Hassan Zahran

5/01/2014

CITY ENGINEER

SHT 1 OF 3

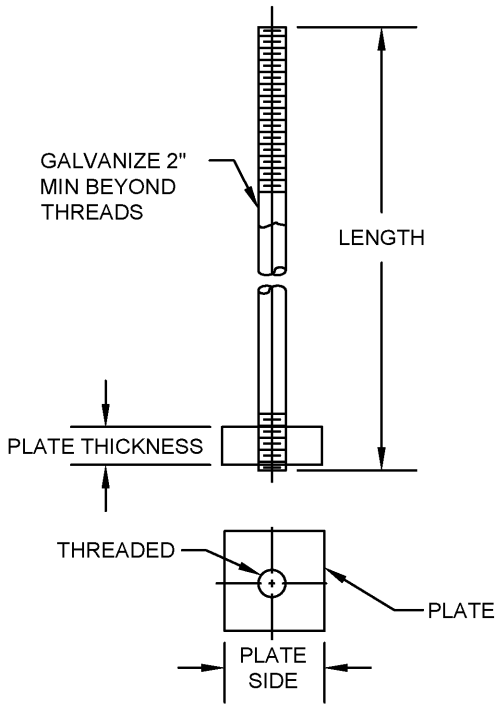

ANCHOR BOLTS

ALL DIMENSIONS IN INCHES UNLESS OTHERWISE NOTED

DIA.	LENGTH (SEE NOTE 10)	THREAD LENGTH	PLATE THICK	PLATE SIDE	THREADS PER INCH
1.75	84	9	2	5	5
2	90	9	2	5	4.5
2.25	90	10	2.5	6	4.5
2.5	114	10	2.5	6	4
3	138	12	3	7	4

ANCHOR BOLTS

SIGNAL SUPPORT/ STRAIN POLE FOUNDATIONS

CITY OF COLUMBUS, OHIO
DEPARTMENT OF PUBLIC SERVICE
DIVISION OF DESIGN AND CONSTRUCTION

STD DWG
4160

5/01/2014

CITY ENGINEER

SHT 2 OF 3

ALL DIMENSIONS IN INCHES UNLESS OTHERWISE NOTED

CITY OF COLUMBUS 4120 & 4121 TYPE SUPPORTS					
DESIGN NO.	D (feet)	W	ANCHOR BOLTS		
			SIZE	CIRCLE	P
4	10	36	1.75 X 84	18	7.75
12	11	36	2 X 90	20	8.5
13	15	36	2 X 90	22	8.5
14	15	36	2 X 90	22	8.5
C15	15	36	2 X 90	24	8.5
C16	15	36	2 X 90	22	8.5

CITY OF COLUMBUS 4170 TYPE SUPPORTS					
DESIGN NO.	D (feet)	W	ANCHOR BOLTS		
			SIZE	CIRCLE	P
5	9	36	1.75 X 84	16	7.75
6	9	36	1.75 X 84	16	7.75
7	10	36	2 X 90	18	8.5
8	10	36	2 X 90	20	8.5
9	10	36	2 X 90	22	8.5
10	11	36	2.25 X 90	22	9
11	11	36	2.25 X 90	22	9
12	12	36	2.5 X 114	23.5	9.75
13	16	36	3 X 138	26	11.75
14	16	48	3 X 138	34	11.75

NOTES:

1. USE 1/2" PREFORMED JOINT FILLER AS PER 705.03 BETWEEN FOUNDATIONS AND ADJACENT PAVED AREAS.

2. A SPECIAL FOUNDATION DESIGN WILL BE REQUIRED WHEN COHESIVE SOIL WITH UNDRAINED SHEAR STRENGTH OF LESS THAN 2000 LB/FT^2 OR GRANULAR SOIL WITH AN ANGLE OF INTERNAL FRICTION LESS THAN 30° AND A WET DENSITY LESS THAN 120 LB/FT^3 IS ENCOUNTERED. THE CONTRACTOR SHALL NOTIFY THE ENGINEER WHEN THESE CONDITIONS ARE IDENTIFIED.

3. PROVIDE ALL ANCHOR BOLTS WITH STANDARD STEEL HEX NUTS, LEVELING NUTS, AND PLAIN WASHERS. THE NUTS SHALL BE CAPABLE OF DEVELOPING THE FULL STRENGTH OF THE ANCHOR BOLTS.

4. AT LOCATIONS WHERE THE EXISTING SLOPE IS 3:1 OR GREATER, THE BURIED DEPTH OF FOUNDATION SHALL APPLY TO THE LOW SIDE OF THE SLOPE. SET THE TOP OF THE FOUNDATION 2" ABOVE THE EXISTING SURFACE ON THE HIGH SIDE OF THE SLOPE. THE ADDITIONAL DEPTH OF FOUNDATION NECESSARY TO MEET THESE REQUIREMENTS SHALL BE ADDED TO THE FORMED TOP.

5. THE SIZE, NUMBER (MINIMUM OF 2) AND ORIENTATION OF CONDUIT ELLS SHALL BE SHOWN IN THE PLAN, EXCEPT THAT A 3/4" SCHEDULE 40 PVC CONDUIT SHALL BE INSTALLED IN EACH FOUNDATION. UNUSED CONDUIT ELLS SHALL BE CAPPED.

6. CITY OF COLUMBUS STANDARD CONSTRUCTION DRAWING 4170 TYPE SUPPORTS DESIGNS 13 AND 14, AND 4120 AND 4121 TYPE SUPPORTS DESIGNS C15 AND C16 SHALL USE 6 NO. 8 REBARS.

7. THE ANCHOR BASE POLE FOUNDATION SIDES SHALL BE ORIENTATED PARALLEL TO THE SIDEWALK OR BACK-OF-CURB OR EDGE-OF-PAVEMENT.

8. THE TOP OF THE FOUNDATION SHALL BE SET BASED ON THE FOLLOWING GUIDELINES:

   FOUNDATION LOCATED ENTIRELY IN WALK OR CONCRETE AREA
   TOP OF FOUNDATION SHALL BE AS PER 4161.

   FOUNDATION LOCATED BEHIND CURB ASSOCIATED WITH CURB RAMP
   TOP OF FOUNDATION SHALL BE FLUSH WITH TOP OF CURB AT BACK OF RAMP FOR A PARALLEL RAMP.

   FOUNDATION LOCATED ADJACENT TO WALK OR CONCRETE AREA
   TOP OF FOUNDATION SHALL BE FLUSH WITH WALK OR CONCRETE AREA FOR A PERPENDICULAR RAMP.

   FOUNDATION LOCATED ADJACENT TO WALK OR CONCRETE WITH STEEP GRADE CHANGE (RISES STEEPLY BEHIND WALK)
   THE BACK SIDE OF THE FOUNDATION SHALL MATCH THE GROUND SLOPE AND THE STREET SIDE OF THE FOUNDATION SHALL BE ABOVE THE SIDEWALK OR CONCRETE AREA AND COMPLETELY OUT OF THE SIDEWALK OR CONCRETE AREA.

9. THE POLE FOUNDATION TOP SHALL BE EDGED USING A 1/2" SIDEWALK EDGER AND NOT CHAMFERED.

10. ANCHOR BOLT LENGTH SHALL BE INCREASED WHEN FOUNDATION IS INSTALLED IN BRICK SIDEWALK. SEE CITY OF COLUMBUS STANDARD DRAWING 4161 AND 2301 FOR INCREASED LENGTH REQUIREMENTS.

11. ALL ANCHOR BOLT STEEL SHALL BE GRADE 105.

SIGNAL SUPPORT/ STRAIN POLE FOUNDATIONS

CITY OF COLUMBUS, OHIO
DEPARTMENT OF PUBLIC SERVICE
DIVISION OF DESIGN AND CONSTRUCTION

Hassan Zahran

CITY ENGINEER

STD DWG
4160

5/01/2014

SHT 3 OF 3

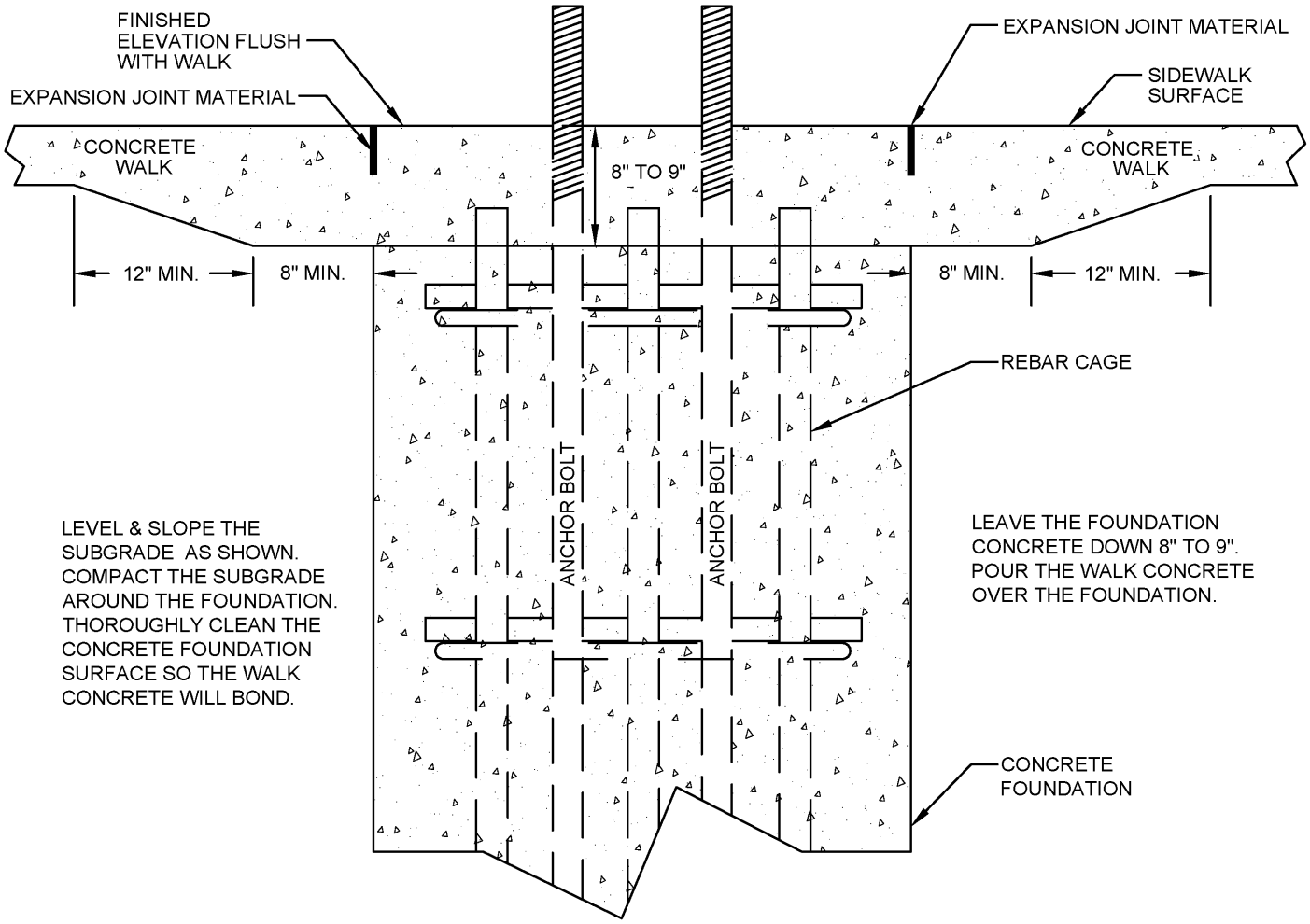

NOTE:

WHEN POURING WALK, EMBED 1/2" THICK EXPANSION JOINT FILLER (CMSC 608.03C AND 705.03). FORM A 3'x3' SQUARE (STRAIN POLE AND MAST ARM POLE FOUNDATION) OR 2'x2' SQUARE (PEDESTAL POLE FOUNDATION) AND CENTER THE JOINT FILLER AROUND THE FOUNDATION AS DIRECTED BY THE ENGINEER. ORIENANT THE EXPANSION JOINTS PARALLEL TO OTHER GEOMETRIC LINES.

POLE FOUNDATION IN SIDEWALK AREA

CITY OF COLUMBUS, OHIO
DEPARTMENT OF PUBLIC SERVICE
DIVISION OF DESIGN AND CONSTRUCTION

STD DWG
4161

Hassan Zahran

5/01/2014

CITY ENGINEER

SHT 1 OF 2

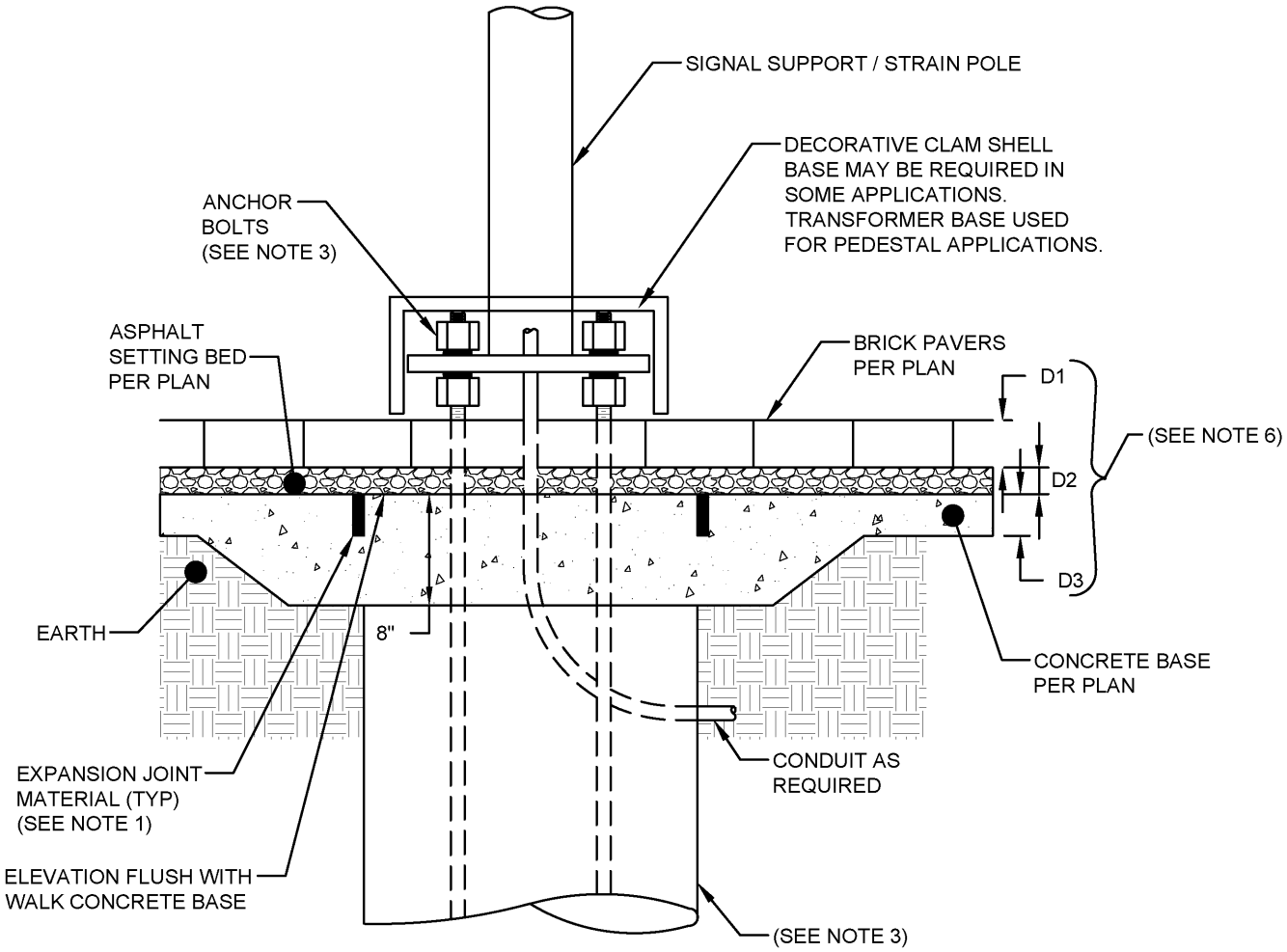

NOTES:

1. WHEN POURING THE CONCRETE WALK BASE, EMBED 1/2" THICK EXPANSION JOINT FILLER (608.03C AND 705.03). FORM A 3'x3' SQUARE (STRAIN POLE AND MAST ARM POLE FOUNDATION) OR 2'x2' SQUARE (PEDESTAL POLE FOUNDATION) AND CENTER THE JOINT FILLER AROUND THE FOUNDATION AS DIRECTED BY THE ENGINEER. ORIENTATE THE FILLER SQUARE PARALLEL TO OTHER GEOMETRIC LINES.

2. REBAR CAGE NOT SHOWN FOR CLARITY.

3. ANCHOR BOLT EMBEDMENT DEPTH SHALL BE AS PER CITY OF COLUMBUS STANDARD DRAWINGS 4160/4163 AND SHALL BE MEASURED FROM THE TOP OF THE CONCRETE BASE SURFACE. ANCHOR BOLT EXPOSURE THROUGH THE ASPHALT SETTING BED AND BRICK AREA SHALL NOT BE CONSIDERED PART OF THE EMBEDMENT DEPTH. ANCHOR BOLT LENGTH SHALL BE INCREASED TO COMPENSATE FOR D1 AND D2.

4. LEVEL & SLOPE THE SUBGRADE AS SHOWN. COMPACT THE SUBGRADE AROUND THE FOUNDATION. THOROUGHLY CLEAN THE CONCRETE FOUNDATION SURFACE SO THE CONCRETE WALK BASE WILL BOND.

5. LEAVE THE FOUNDATION CONCRETE DOWN 8". POUR THE CONCRETE WALK BASE OVER THE LOWERED FOUNDATION.

6. PAVER AND SETTING BED DIMENSIONS SHALL BE PER CITY OF COLUMBUS STANDARD DRAWING 2301 OR PER PLAN.

POLE FOUNDATION IN SIDEWALK AREA

CITY OF COLUMBUS, OHIO
DEPARTMENT OF PUBLIC SERVICE
DIVISION OF DESIGN AND CONSTRUCTION

STD DWG
4161

5/01/2014

CITY ENGINEER

SHT 2 OF 2

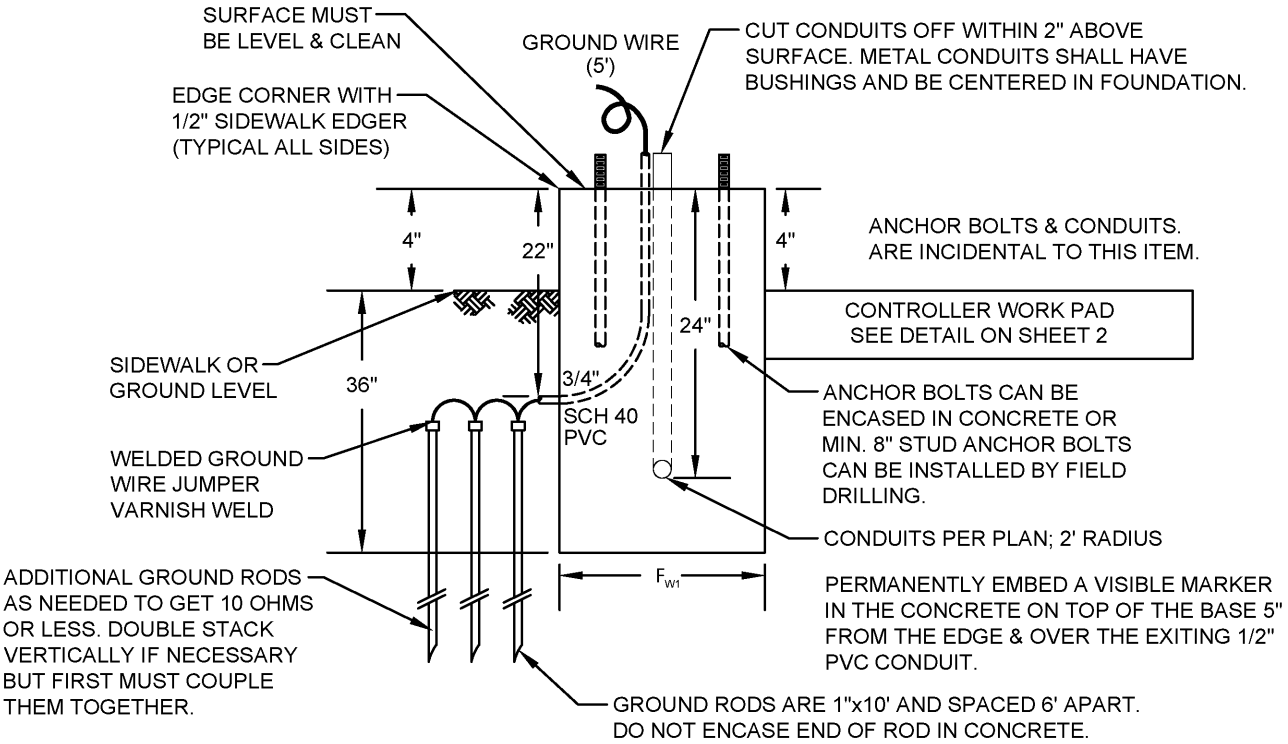

NOTE:

USE EXPANSION MATERIAL BETWEEN THE BASE CONCRETE & OTHER CONCRETE AREAS.

TRAFFIC SIGNAL CONTROLLER CABINET FOUNDATION

CITY OF COLUMBUS, OHIO
DEPARTMENT OF PUBLIC SERVICE
DIVISION OF DESIGN AND CONSTRUCTION

STD DWG
4162

Hassan Zahran

5/01/2014

CITY ENGINEER

SHT 1 OF 2

CONTROLLER CABINET AND FOUNDATION DIMENSIONS				
	M36 CABINET (IN.)	P44 CABINET (IN.)	P-UPS CABINET (#1) (IN.)	P-UPS CABINET (#2) (IN.)
C_D = CABINET DEPTH	17	26	26	29
C_W = CABINET WIDTH	36	44	60	58
F_{W1} = FOUNDATION WIDTH 1	30	30	30	33
F_{W2} = FOUNDATION WIDTH 2	48	48	64	62
WP_{W1} = WORK PAD WIDTH 1	36	36	36	36
WP_{W2} = WORK PAD WIDTH 2	48	48	64	98
WP_{W3} = WORK PAD WIDTH 3	N/A	N/A	N/A	69

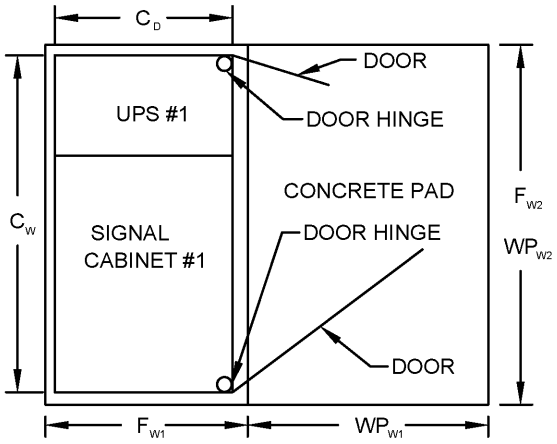

UPS CABINET FOUNDATION / WORK PAD TYPE 1

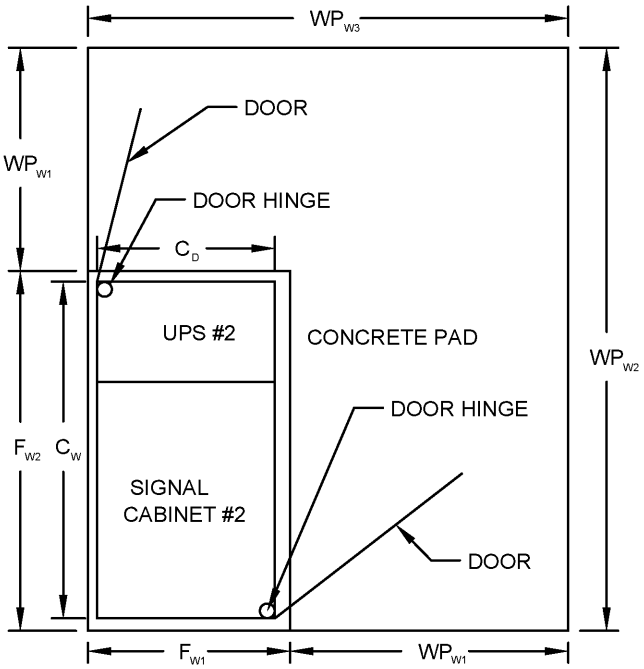

UPS CABINET FOUNDATION / WORK PAD TYPE 2

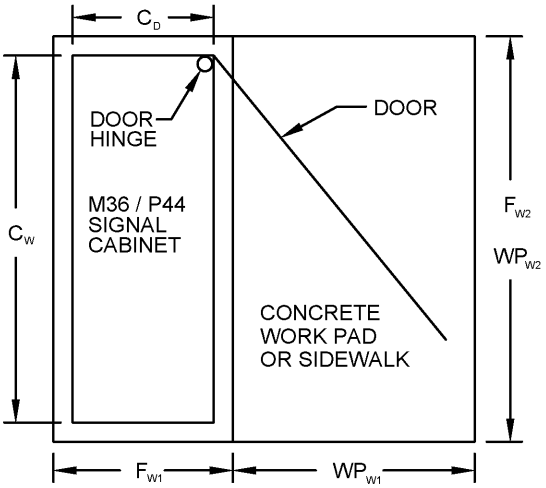

STANDARD CABINET FOUNDATION / WORK PAD

NOTE:

BUILD-UP/STABILIZATION OF SURROUNDING AREA MAY BE REQUIRED BY ENGINEER AND IS INCIDENTAL TO THE INSTALLATION. THIS APPLIES TO ALL SLOPED AREA INSTALLATIONS.

TRAFFIC SIGNAL CONTROLLER CABINET FOUNDATION

CITY OF COLUMBUS, OHIO
DEPARTMENT OF PUBLIC SERVICE
DIVISION OF DESIGN AND CONSTRUCTION

STD DWG
4162

5/01/2014

CITY ENGINEER

SHT 2 OF 2

FOUNDATION DETAILS			
PEDESTAL / POLE	DEPTH (D)	BOLT CIRCLE	REBAR REQUIRED
STD. DWG 4100	3'	14.5"	NO
STD. DWG 4101	3'	14.5"	NO
STD. DWG 4102	4'	14.5"	YES
STD. DWG 4103	4'	14.5"	YES
STD. DWG 4104	4'	14.5"	YES
STD. DWG 4106	4'	9.5"	NO

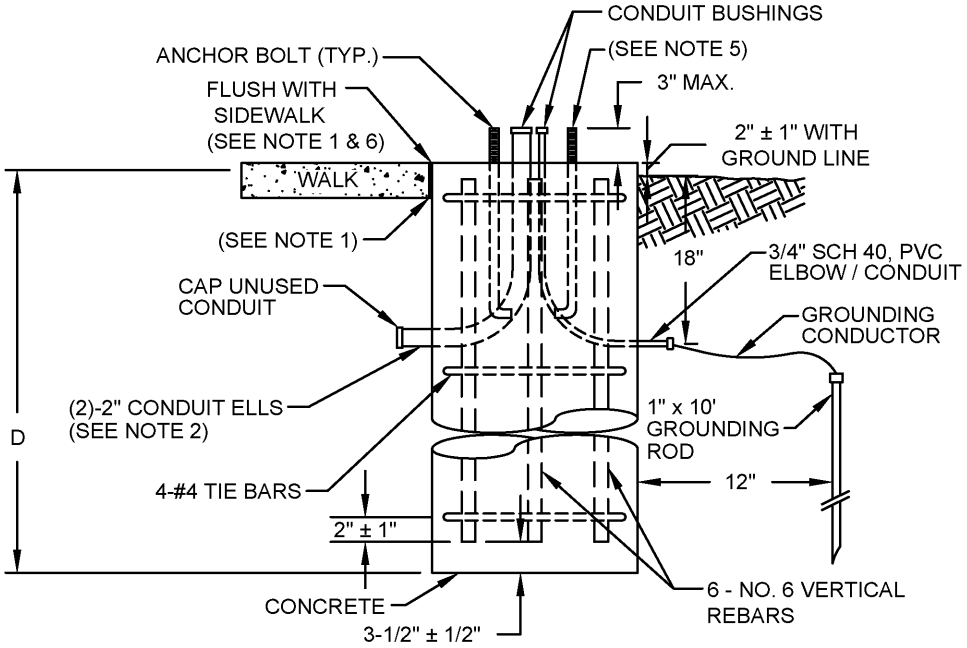

SECTION VIEW

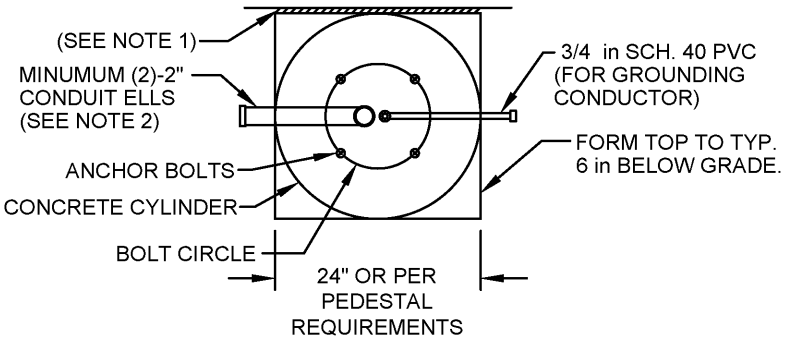

TOP VIEW

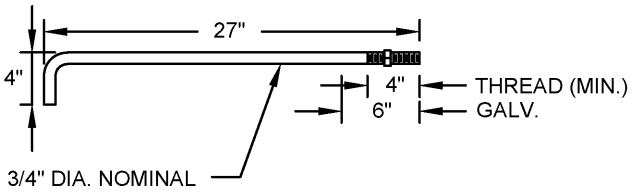

PEDESTAL ANCHOR BOLT
ASTM A307 STEEL

PEDESTAL FOUNDATION

CITY OF COLUMBUS, OHIO
DEPARTMENT OF PUBLIC SERVICE
DIVISION OF DESIGN AND CONSTRUCTION

STD DWG
4163

5/01/2014

CITY ENGINEER

SHT 1 OF 2

NOTES:

1. 1/2" PREFORMED JOINT FILLER AS PER 608.03C SHALL BE USED BETWEEN FOUNDATIONS AND ADJACENT PAVED AREAS.

2. THE SIZE, NUMBER (MINIMUM OF 2) AND ORIENTATION OF CONDUIT ELLS SHALL BE AS SHOWN IN THE PLAN, EXCEPT THAT A 3/4" SCHEDULE 40 PVC CONDUIT SHALL BE INSTALLED IN EACH FOUNDATION. UNUSED CONDUIT ELLS SHALL BE CAPPED.

3. THE SIZE, NUMBER AND LOCATION OF ANCHOR BOLTS SHALL BE IN ACCORDANCE WITH THE MANUFACTURER'S RECOMMENDATIONS.

4. ALL PEDESTALS SHALL BE PROVIDED WITH A METHOD OF SECURELY ATTACHING A 4 AWG INSULATED COPPER GROUNDING CONDUCTOR TO THE PEDESTAL OR ANCHOR BOLT. NO CABLES OR CONNECTIONS SHALL BE EXTERNAL TO THE PEDESTAL.

5. THE PEDESTAL BASE SHALL SET ON THE FOUNDATION TOP WITHOUT GROUTING, PREFORMED FILLERS OR LEVELING NUTS UNDER THE BASE. STAINLESS STEEL SHIMS MAY BE USED UNDER THE BASE FOR LEVELING THE INSTALLATION.

6. THE FOUNDATION AREA OF CONTACT WITH THE PEDESTAL BASE SHALL BE LEVEL. IF ADJACENT PAVED AREAS SLOPE, THE REMAINDER OF THE FOUNDATION TOP SHALL BE BEVELED TO MEET THE ADJACENT ELEVATIONS.

7. THE TOP OF THE FOUNDATION SHALL BE SET BASED ON THE FOLLOWING GUIDELINES:

   FOUNDATION LOCATED ENTIRELY IN WALK OR CONCRETE AREA

   TOP OF FOUNDATION SHALL BE FLUSH WITH WALK OR CONCRETE SURFACE.

   FOUNDATION LOCATED BEHIND CURB ASSOCIATED WITH CURB RAMP

   TOP OF FOUNDATION SHALL BE FLUSH WITH TOP OF CURB AT BACK OF RAMP.

   FOUNDATION LOCATED ADJACENT TO WALK OR CONCRETE AREA

   TOP OF FOUNDATION SHALL BE FLUSH WITH WALK OR CONCRETE AREA.

   FOUNDATION LOCATED ADJACENT TO WALK OR CONCRETE WITH STEEP GRADE CHANGE

   THE BACK SIDE OF THE FOUNDATION SHALL MATCH THE GROUND SLOPE AND THE STREET SIDE OF THE FOUNDATION SHALL BE ABOVE THE SIDEWALK OR CONCRETE AREA AND COMPLETELY OUT OF THE SIDEWALK OR CONCRETE AREA.

PEDESTAL FOUNDATION

CITY OF COLUMBUS, OHIO DEPARTMENT OF PUBLIC SERVICE DIVISION OF DESIGN AND CONSTRUCTION	STD DWG 4163
Hassan Zahran	5/01/2014
CITY ENGINEER	SHT 2 OF 2

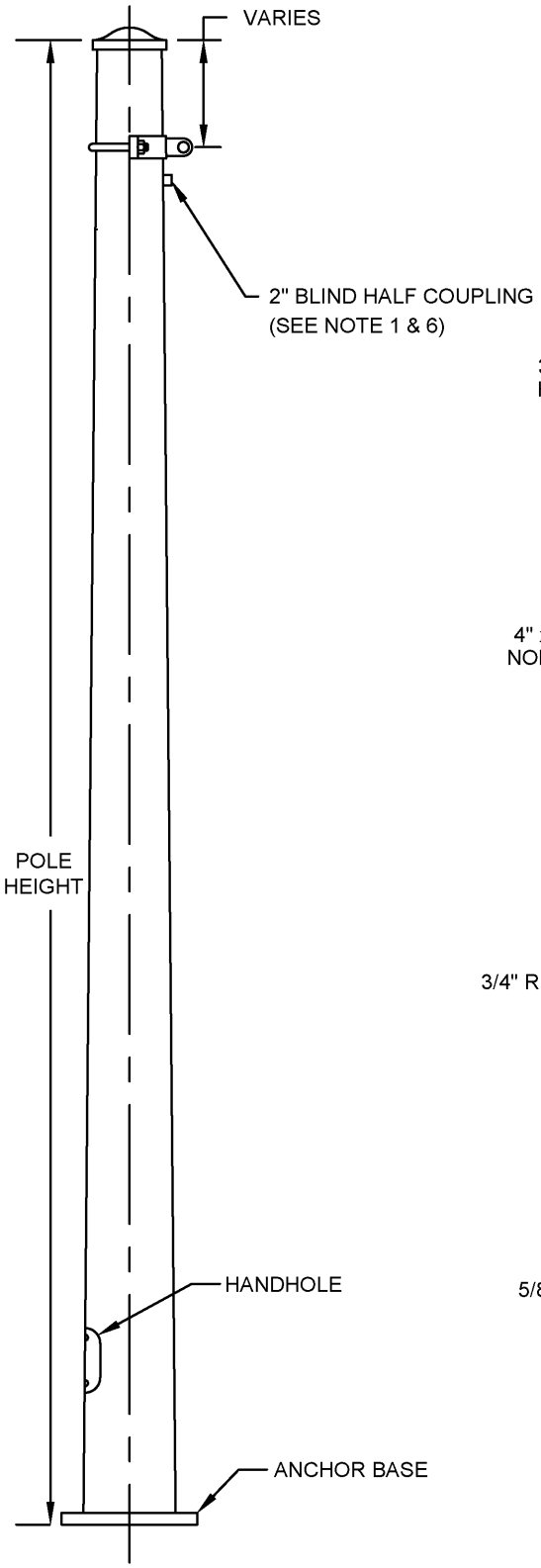

TAPERED TUBE

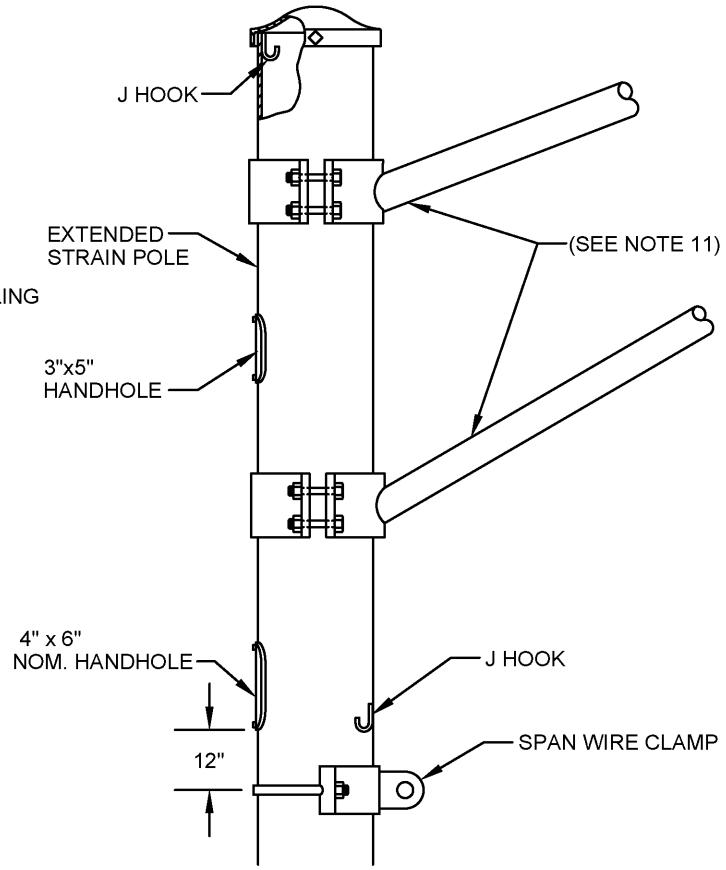

COMBINATION POLE

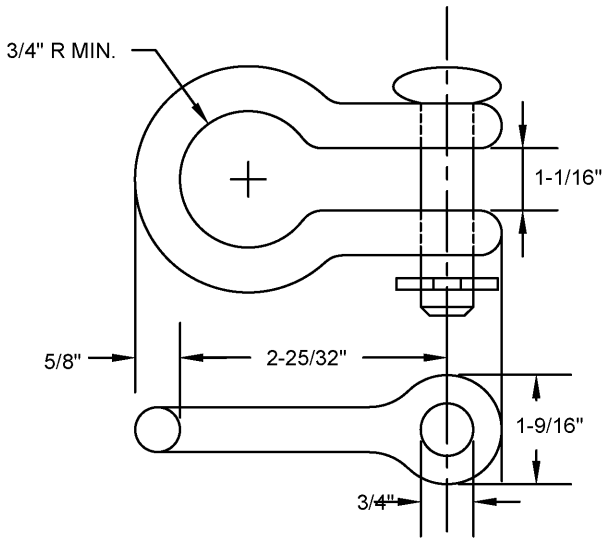

ANCHOR TYPE SHACKLE

STRAIN POLE

CITY OF COLUMBUS, OHIO DEPARTMENT OF PUBLIC SERVICE DIVISION OF DESIGN AND CONSTRUCTION	STD DWG 4170
Hassan Zahran	5/01/2014
CITY ENGINEER	SHT 1 OF 6

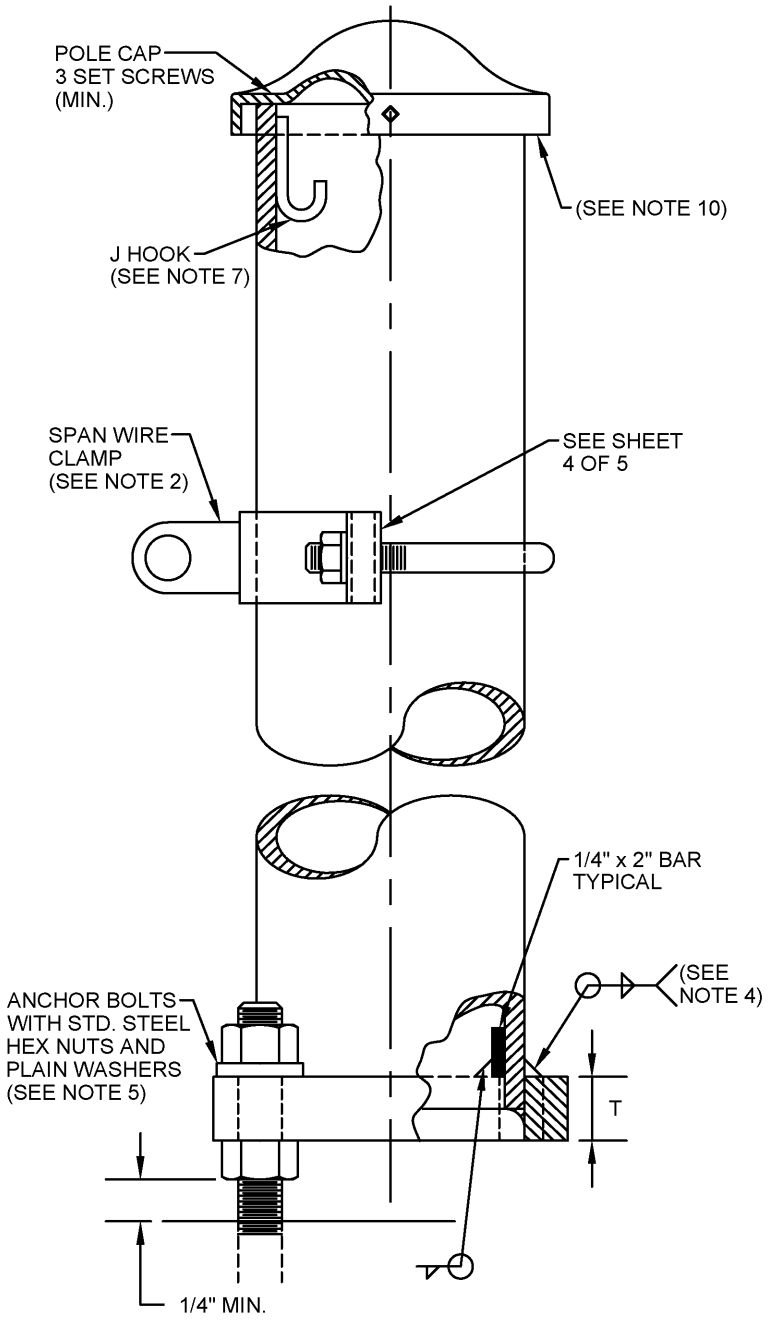

POLE DETAILS

STRAIN POLE

CITY OF COLUMBUS, OHIO DEPARTMENT OF PUBLIC SERVICE DIVISION OF DESIGN AND CONSTRUCTION	STD DWG 4170
Hassan Zahran	5/01/2014
CITY ENGINEER	SHT 2 OF 6

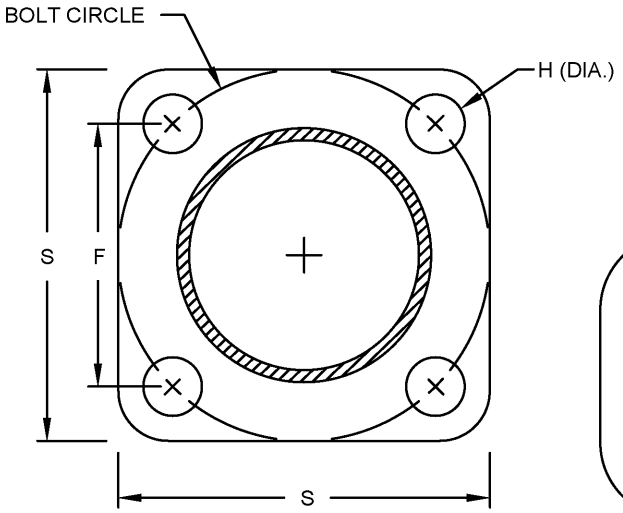

BASE PLATE

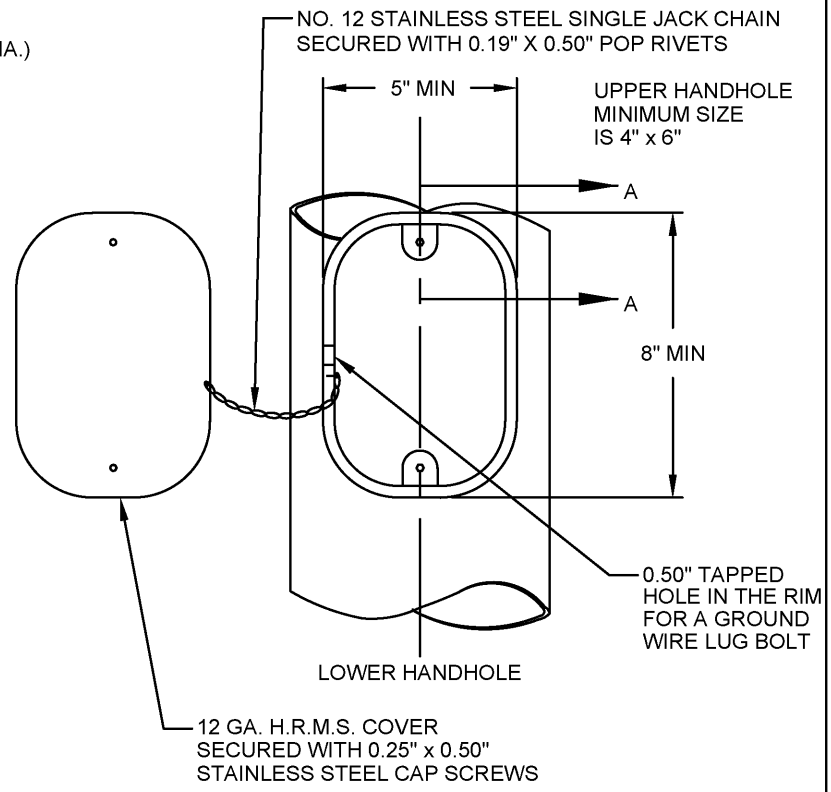

HANDHOLE

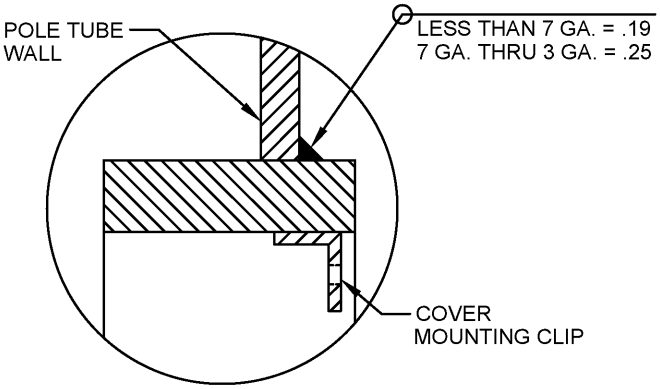

SECTION A-A

STRAIN POLE

CITY OF COLUMBUS, OHIO DEPARTMENT OF PUBLIC SERVICE DIVISION OF DESIGN AND CONSTRUCTION	STD DWG 4170
Hassan Zahran	5/01/2014
CITY ENGINEER	SHT 3 OF 6

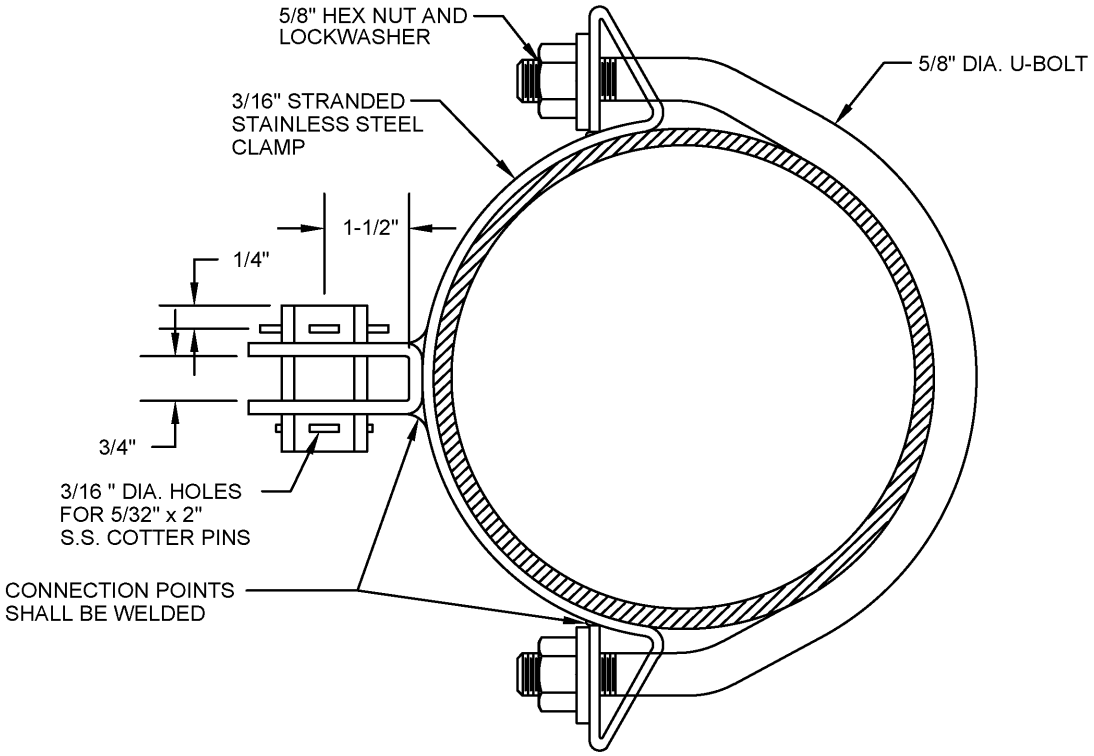

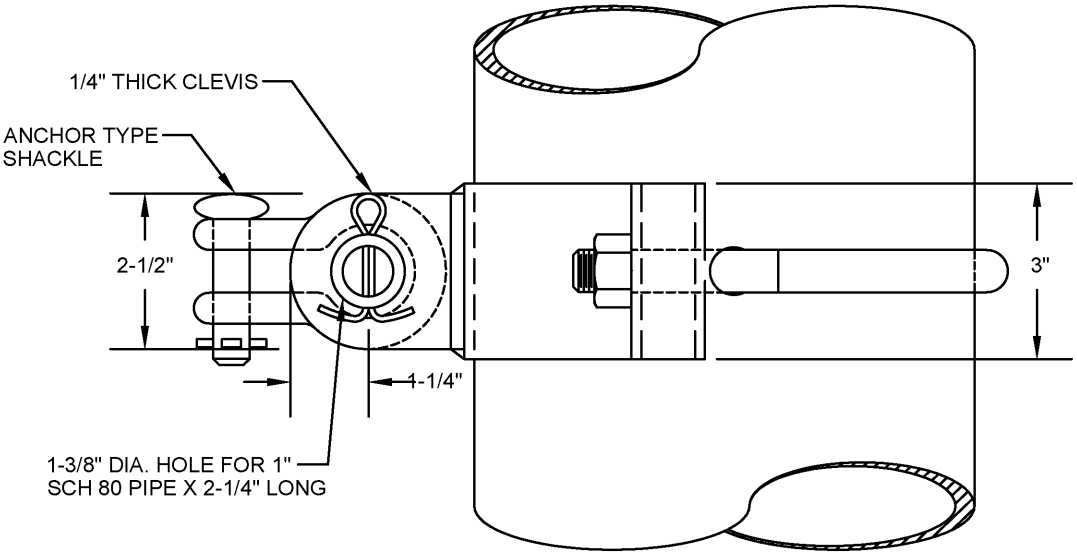

SPAN WIRE CLAMP

STRAIN POLE

CITY OF COLUMBUS, OHIO DEPARTMENT OF PUBLIC SERVICE DIVISION OF DESIGN AND CONSTRUCTION	STD DWG 4170
Hassan Zahran	5/01/2014
CITY ENGINEER	SHT 4 OF 6

ALL DIMENSIONS ARE IN INCHES, UNLESS OTHERWISE NOTED.

DESIGN NO.	MIN. POLE HEIGHT (feet)	BASE MOMENT AT YIELD (ft. kips)	MAX DESIGN BASE MOMENT (ft. kips) (NOTE C)	TAPERED (NOTE A)		TAPERED (NOTE B)			ANCHOR BASE				
				BASE DIA.	MIN. WALL THICKNESS	BASE DIA.	MIN. WALL THICKNESS	NO. OF SIDES	BOLT CIRCLE	F	S	T	H
5	30	121.0	-	12	.239	12	.239	NA	16	11.3125	17	2	2.125
6	30	149.0	-	12	.299	12	.250	10	16	11.3125	17	2	2.125
7	30	176.0	-	13	.299	13	.250	12	18	12.75	18.50	2	2.375
8	30	206.0	-	14	.299	15	.219	14	20	14.125	20.50	2	2.375
9	30	228.0	-	12	.478 (2 PLY)	14.75	.250	14	22	15.50	23	2.50	2.375
10	32	270.0	-	13	.478 (2 PLY)	16	.250	16	22	15.50	23	2.50	2.625
11	32	316.0	-	14	.478 (2 PLY)	15.50	.313	14	22	15.50	23	2.50	2.625
12	32	385.0	-	14	.598 (2 PLY)	17.25	.313	16	23.50	16.625	24.50	2.50	2.875
13	32	-	590	18	0.626	18	0.500	14	26	18.38	30	3.50	3.375
14	32	-	900	23	0.563	22	0.500	16	34	24.04	36.5	3.50	3.375

NOTES:

A. TAPERED TUBE SHALL BE STEEL WITH A MINIMUM OF 55,000 PSI YIELD STRESS AFTER GALVANIZING.

B. DESIGN 5 SHALL BE ASTM A595M STEEL WITH A MINIMUM OF 55,000 PSI YIELD STRENGTH AFTER GALVANIZING. DESIGNS 6 THRU 14 SHALL BE ASTM A572M GRADE 65 STEEL WITH A MINIMUM OF 65,000 PSI YIELD STRENGTH AFTER GALVANIZING.

C. DESIGN 13 AND 14 STRAIN POLES ARE AASHTO 1994 COMPLIANT.

STRAIN POLE

CITY OF COLUMBUS, OHIO
DEPARTMENT OF PUBLIC SERVICE
DIVISION OF DESIGN AND CONSTRUCTION

Hassan Zahran

CITY ENGINEER

STD DWG
4170

5/01/2014

SHT 5 OF 6

NOTES:

1. SIGNAL CABLE ENTRANCE SHALL BE A 2" MINIMUM BLIND HALF COUPLING PROVIDED IN EACH POLE ON CORNERS WITHOUT CABINET. MINIMUM OF 3" BLIND HALF COUPLING ON CORNER WITH CABINET OR AS SPECIFIED ON THE PLANS.

2. SPAN WIRE CLAMP SHALL BE GALVANIZED STEEL, CAPABLE OF RESISTING A LOAD OF 12,500 POUNDS MINIMUM WITHOUT PERMANENT DISTORTION.

3. FOR FOUNDATION DETAILS, INCLUDING ANCHOR BOLT DETAILS, SEE CITY OF COLUMBUS STANDARD CONSTRUCTION DRAWING 4160.

4. THE BASE PLATE SHALL BE WELDED TO TWO PLY POLES WITH AWS PREQUALIFIED WELDS IN CONFORMANCE WITH 730.04.

5. A MINIMUM OF ONE FULL BOLT THREAD SHALL REMAIN ABOVE THE ANCHOR NUT.

6. ALL UNUSED COUPLINGS SHALL BE PROVIDED WITH A REMOVABLE GALVANIZED CAST IRON PLUG.

7. PROVIDE 1 OR 2 WELDED CABLE SUPPORT HOOKS ('J' OR 'C' HOOKS) LOCATED ON THE INSIDE OF THE POLE.

8. STRAIN POLES SHALL BE COATED IN ACCORDANCE WITH THE PLANS.

9. PROVIDE 1, 2 OR 3 HANDHOLES, AS PER PLAN DESIGN, EACH COMPLETE WITH A COVER, A RECTANGULAR OR ELLIPTICAL REINFORCED FRAME, AND A STAINLESS STEEL FASTENER FOR THE COVER. THE FASTENER SHALL BE FLUSH WITH THE HANDHOLE SURFACE. THE HANDHOLES SHALL BE LOCATED 180 DEGREES FROM THE RESULTANT FORCE UNLESS SPECIFIED OTHERWISE.

   A.) THE HAND HOLE NEAR THE VIDEO BRACKET ARM SHALL HAVE A MINIMUM INSIDE OPENING OF 3" X 5" AND BE SIMILAR IN DESIGN TO THE BOTTOM HAND HOLE EXCEPT THAT NO GROUNDING PROVISION IS REQUIRED.

   B.) THE HAND HOLE NEAR THE SPAN WIRE ATTACHMENT POINT SHALL HAVE A MINIMUM INSIDE OPENING OF 4" X 6" AND BE SIMILAR IN DESIGN TO THE BOTTOM HAND HOLE EXCEPT THAT NO GROUNDING PROVISION IS REQUIRED.

   C.) THE BOTTOM HAND HOLE SHALL HAVE A MINIMUM INSIDE OPENING OF 5" X 8". A GROUNDING PROVISION CAPABLE OF ACCEPTING 4 - #4 AWG COPPER GROUNDING WIRES SHALL BE PROVIDED AND SHALL BE ATTACHED TO THE FRAME.

10. PROVIDE A REMOVABLE POLE CAP ATTACHED EITHER BY A MINIMUM OF 3 STAINLESS STEEL SET SCREWS OR BY A STAINLESS STEEL THROUGH BOLT.

11. FOR BRACKET ARM DETAILS SEE CITY OF COLUMBUS STANDARD DRAWING 4110.

STRAIN POLE	
CITY OF COLUMBUS, OHIO DEPARTMENT OF PUBLIC SERVICE DIVISION OF DESIGN AND CONSTRUCTION	STD DWG 4170
Hassan Zahran	5/01/2014
CITY ENGINEER	SHT 6 OF 6

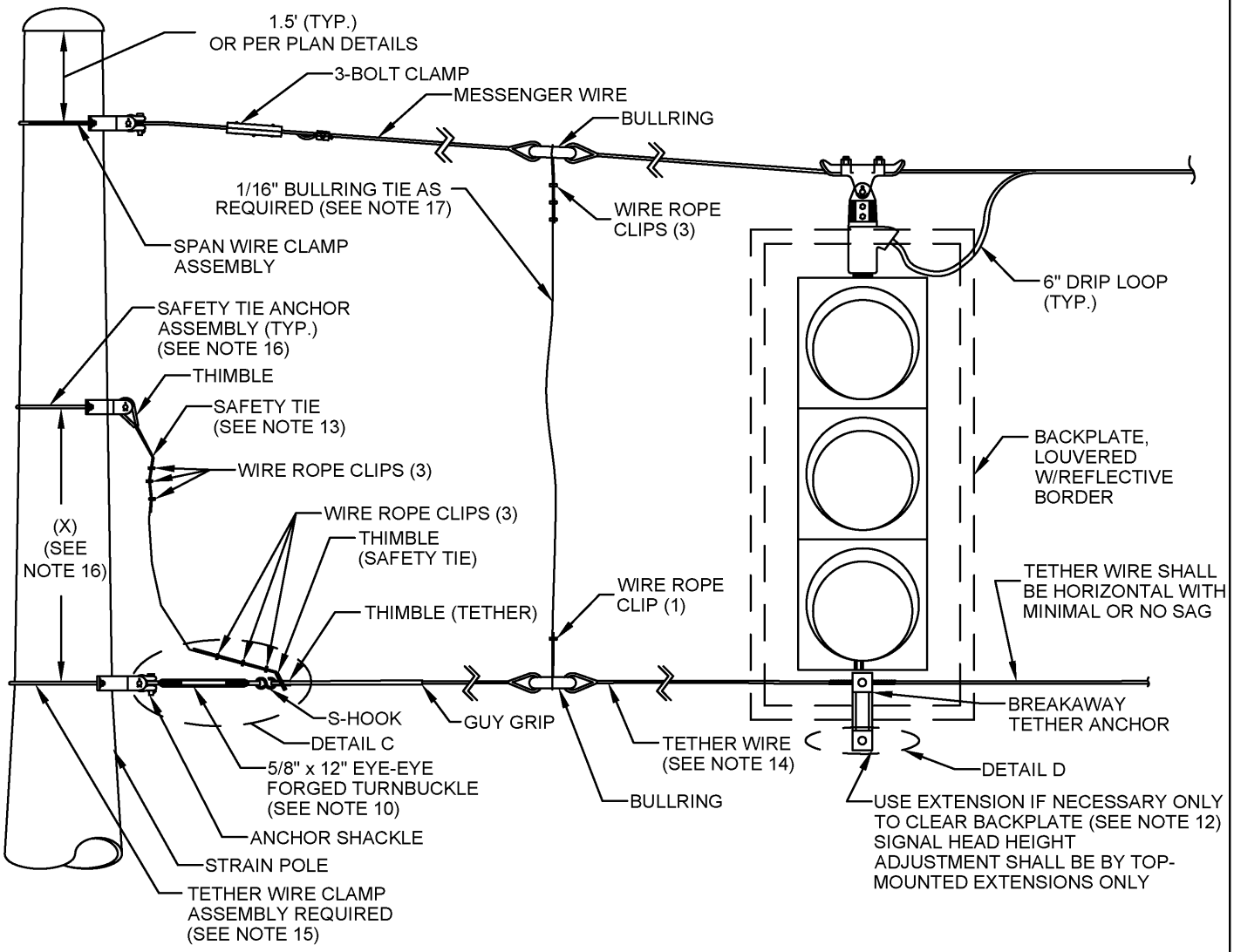

OVERHEAD SIGNAL ATTACHMENTS - SPAN WIRE

CITY OF COLUMBUS, OHIO
DEPARTMENT OF PUBLIC SERVICE
DIVISION OF DESIGN AND CONSTRUCTION

STD DWG
4202

5/01/2014

CITY ENGINEER

SHT 1 OF 7

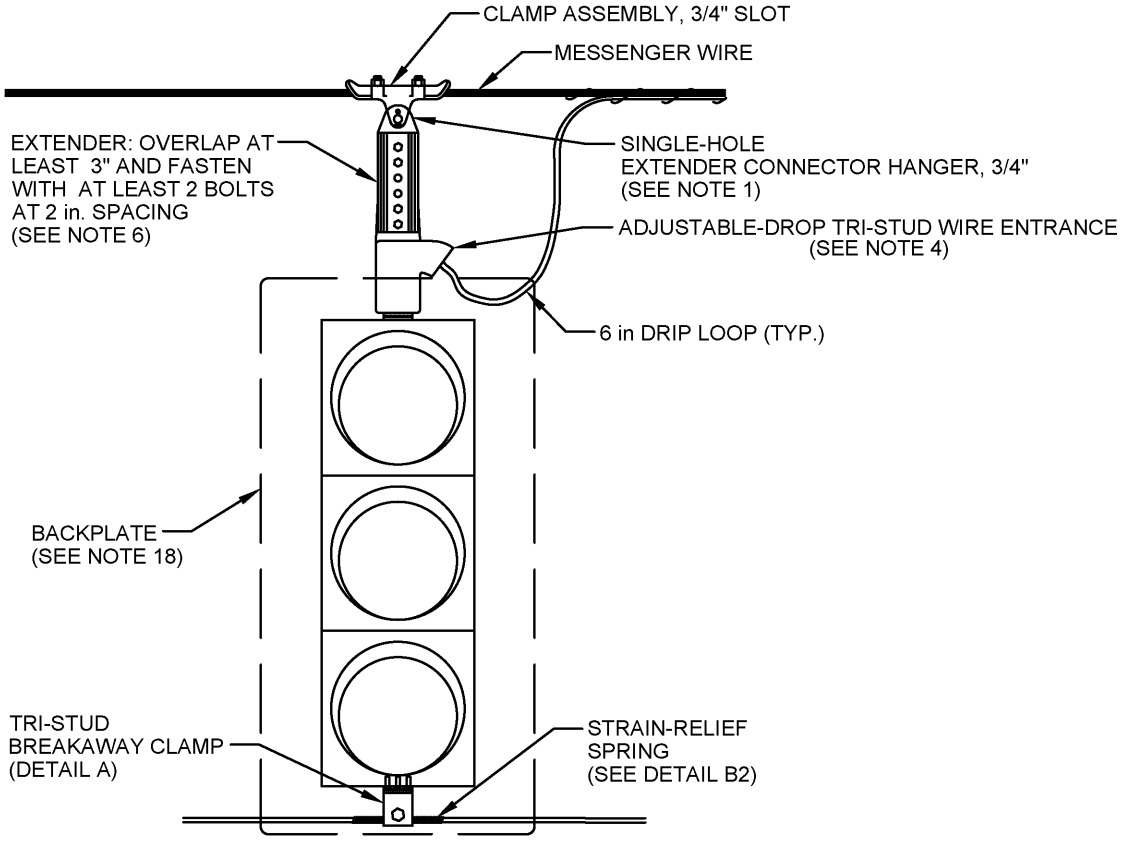

3-SECTION SIGNAL HEAD SUSPENSION

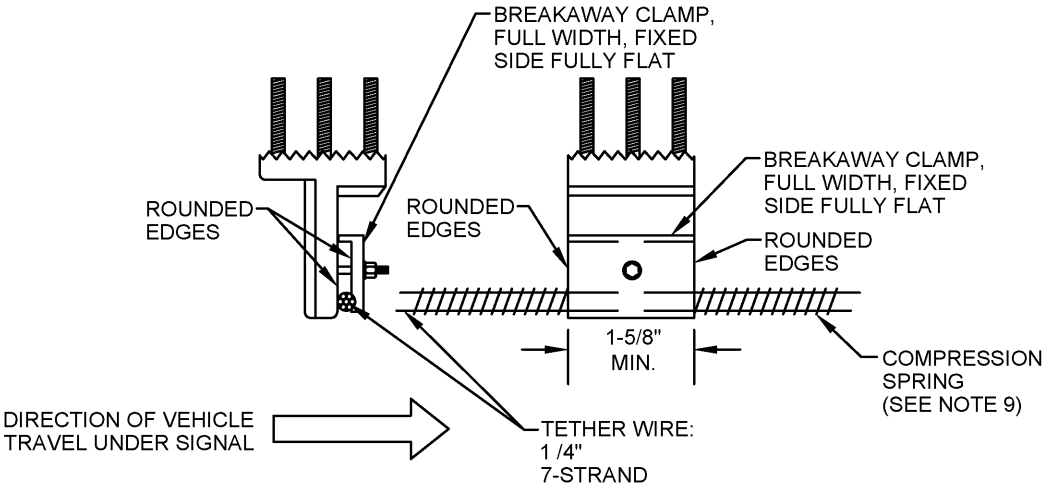

DETAIL A: BREAKWAY TETHER ANCHOR
(TYPICAL, SEE NOTE 6)

OVERHEAD SIGNAL ATTACHMENTS - SPAN WIRE

CITY OF COLUMBUS, OHIO
DEPARTMENT OF PUBLIC SERVICE
DIVISION OF DESIGN AND CONSTRUCTION

STD DWG
4202

Hassan Zahran
CITY ENGINEER

5/01/2014

SHT 2 OF 7

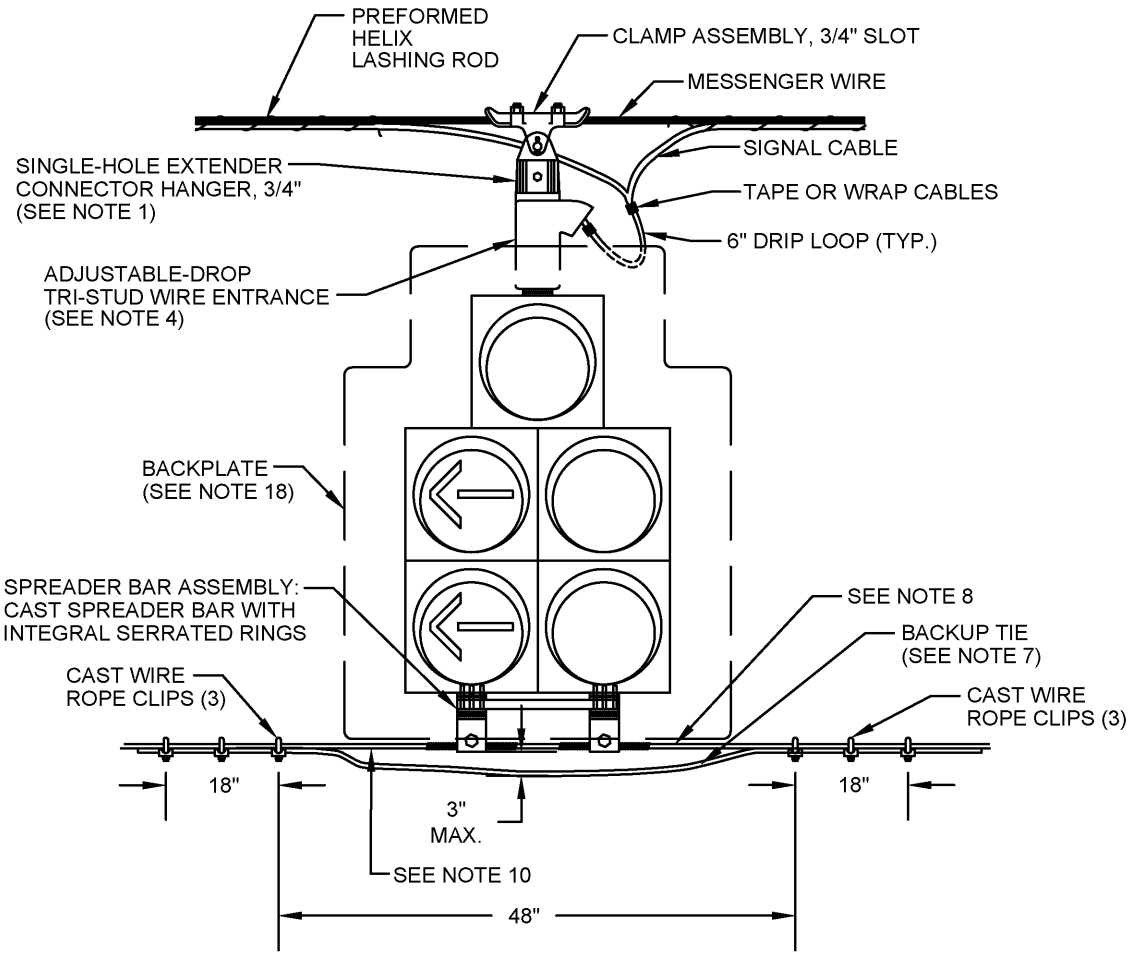

5-SECTION SIGNAL HEAD SUSPENSION

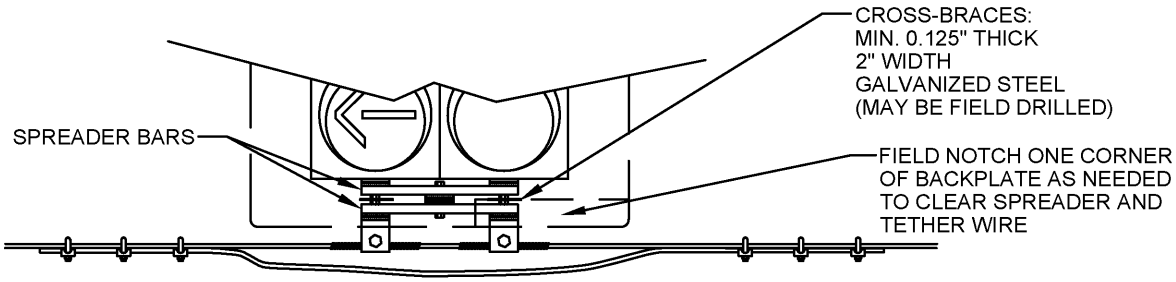

DETAIL B1:
DOUBLE SPREADER BARS
AND CROSS-BRACING ON
SKEWED SPANS
(FRONT VIEW)

OVERHEAD SIGNAL ATTACHMENTS - SPAN WIRE

CITY OF COLUMBUS, OHIO
DEPARTMENT OF PUBLIC SERVICE
DIVISION OF DESIGN AND CONSTRUCTION

STD DWG
4202

5/01/2014

CITY ENGINEER

SHT 3 OF 7

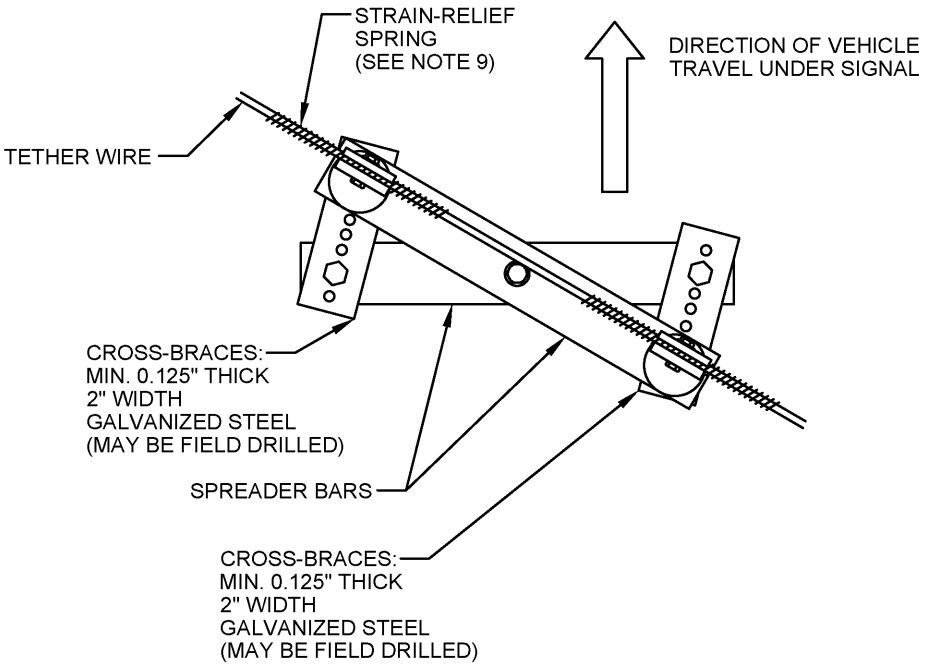

DETAIL B2:
DOUBLE SPREADER BARS
AND CROSS-BRACING ON
SKEWED SPANS
(BOTTOM VIEW)

OVERHEAD SIGNAL ATTACHMENTS - SPAN WIRE

CITY OF COLUMBUS, OHIO
DEPARTMENT OF PUBLIC SERVICE
DIVISION OF DESIGN AND CONSTRUCTION

STD DWG
4202

5/01/2014

CITY ENGINEER

SHT 4 OF 7

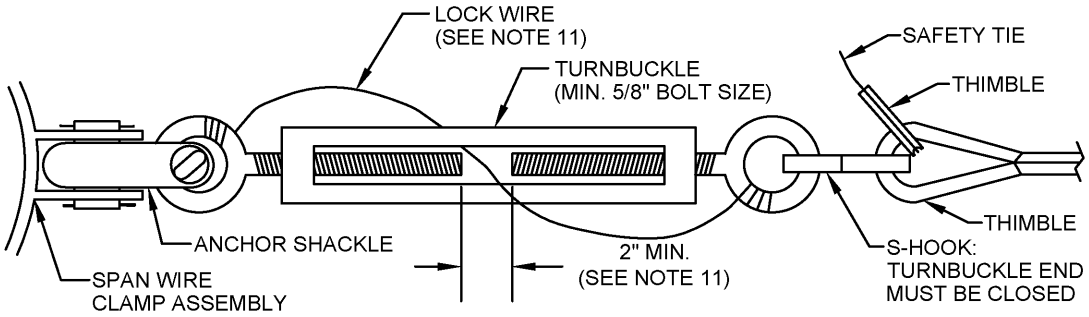

DETAIL C
(TOP VIEW)

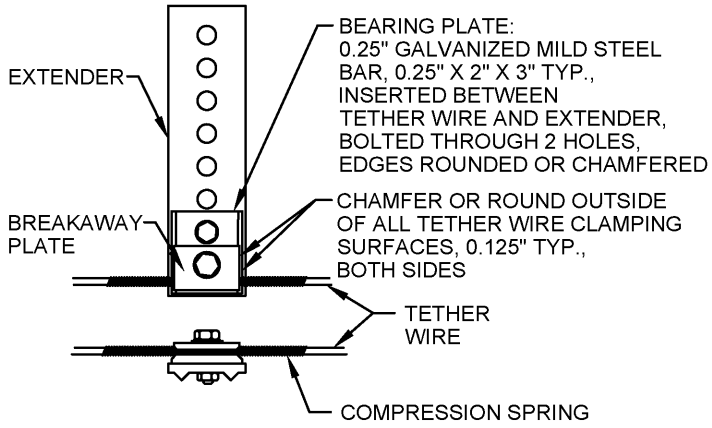

DETAIL D
(FRONT VIEW)
(BOTTOM VIEW)

OVERHEAD SIGNAL ATTACHMENTS - SPAN WIRE

CITY OF COLUMBUS, OHIO DEPARTMENT OF PUBLIC SERVICE DIVISION OF DESIGN AND CONSTRUCTION	STD DWG 4202
Hassan Zahran	5/01/2014
CITY ENGINEER	SHT 5 OF 7

NOTES:

1. ADJUST HANGER AND SPAN WIRE CLAMP TO ELIMINATE ALL PLAY BETWEEN HANGER AND CLAMP BY USING SHIM WASHERS AS NECESSARY. CAST 3/4" ALUMINUM MATCHING CLAMPS AND HANGERS WITH A TIGHT INITIAL FIT SHALL BE USED.

2. ALL SIGNAL HEAD ASSEMBLIES SHALL BE INSTALLED IN A PLUMB POSITION AND PERPENDICULAR TO THE APPROACH LANE.

3. ALL SIGNAL HEADS SHALL BE INSTALLED WITH THEIR LOWEST PART (INCLUDING TETHER ATTACHMENT HARDWARE AND BACKPLATES) WITH A CLEARANCE ABOVE THE ROADWAY PAVEMENT AT ALL POINTS OF 16.5' MINIMUM, 19' MAXIMUM. HOWEVER 17' IS PREFERED HEIGHT. TO OBTAIN 17' IT IS INTENDED THAT THIS CLEARANCE BE OBTAINED WITHOUT THE USE OF BOTTOM EXTENDERS, BUT RATHER BY THE CAREFUL SELECTION OF FOUNDATION HEIGHTS, ATTACHMENT HEIGHTS, SPAN WIRE SAG, AND OTHER FACTORS DURING THE INSTALLATION. IF THE INSTALLATION CANNOT BE ADJUSTED TO THE PROPER CLEARANCE THE CONTRACTOR SHALL ADVISE THE CITY OF ALL SIGNALS WHICH EXCEED THE MAXIMUM.

4. SIGNAL HEAD ROTATION SHALL BE PREVENTED BY THE USE OF SERRATED RINGS AND TRI-STUDS OR OTHER POSITIVE LOCKING DEVICES INCORPORATED IN THE SIGNAL HOUSING AND AT CRITICAL LOCATIONS IN THE SUPPORTING HARDWARE. ONLY SINGLE-PIECE TRI-STUD ENTRANCE PORTS SHALL BE USED, NOT INSERTS.

5. ALL CONDUCTORS SHALL HAVE ADEQUATE CLEARANCE BETWEEN HANGERS, THIMBLES, BULLRINGS, ETC. IN ORDER TO AVOID DAMAGE FROM RUBBING.

6. FOR ALL TETHERED INSTALLATIONS, BREAKAWAY TETHER ANCHOR(S) SHALL BE INSTALLED IN BOTTOM BRACKET. BOTTOM TETHER ANCHOR EXTENDER SHALL BE USED ONLY IF THERE IS INTERFERENCE BETWEEN BACKPLATE AND TETHER WIRE. SIGNAL HEIGHT ADJUSTMENT SHALL BE MADE BY TOP-MOUNTED EXTENDERS ONLY. BREAKAWAY CLAMP SHALL BE FULL WIDTH WITH ROUNDED EDGES. CLAMP SHOULD COMPRESS TETHER WIRE ONLY AGAINST A FLAT SURFACE (DETAIL A).

7. BACKUP TIE SHALL BE 1 /4", 7-STRAND WIRE IDENTICAL TO TETHER WIRE. THREE CAST WIRE ROPE CLIPS ON EACH SIDE SHALL BE USED WITH 18" OVELAP AND SPACING AS SHOWN. TIE SHALL HANG NO LOWER THAN 17". ABOVE PAVEMENT, AND MUST NOT RUB AGAINST THE BREAKAWAY CLAMP. TIES UNDER 3-SECTION HEADS ARE RECOMMENDED IN WINDY AREAS; SHALL BE INSTALLED IF SPECIFIED IN PLANS, OR IF DIRECTED BY THE CITY. SPACING OF CLIPS MAY BE ADJUSTED TO ACCOMODATE ADJACENT HEADS. CLOSELY SPACED ADJACENT HEADS MAY SHARE A SINGLE BACKUP TIE AND WIRE ROPE CLIPS; THERE SHALL BE A MINIMUM OF THREE WIRE ROPE CLIPS BETWEEN HEADS.

8. MULTI-WAY HEADS WITH BACKPLATES SHALL NOT BE USED ON TETHERED SPANS. EXISTING MULTI-WAY HEADS SHALL BE SEPARATED AS DIRECTED BY THE CITY. REWIRE AS NECESSARY TO SEPARATE THE HEADS PER THE PROPER ALIGNMENT.

9. COMPRESSION SPRING, 0.375" OD, 0.054" WIRE DIAMETER, 10-12 COILS PER INCH, STAINLESS STEEL 6" MINIMUM LENGTH.

OVERHEAD SIGNAL ATTACHMENTS - SPAN WIRE

CITY OF COLUMBUS, OHIO
DEPARTMENT OF PUBLIC SERVICE
DIVISION OF DESIGN AND CONSTRUCTION

STD DWG
4202

5/01/2014

CITY ENGINEER

SHT 6 OF 7

10. S-HOOK IS MATCHED TO THE STRAIN POLE DESIGN NUMBER (SEE TABLE 1). S-HOOK AND TURNBUCKLE ARE REQUIRED ONLY AT ONE END OF SIMPLE SPANS, ALL ENDS OF COMPLEX SPANS. S-HOOK SHALL BE CLOSED AT POLE END. IF S-HOOK BEGINS TO YIELD DURING INSTALLATION, IT SHALL BE REMOVED AND REPLACED. THE WIRE TENSION SHALL BE ADJUSTED TO MINIMIZE MOVEMENT OF SIGNAL HEADS IN HIGH WINDS. TYPICAL TENSION IS 600 TO 800 LBS.

TABLE 1 - S-HOOK PROPERTIES

Strain Pole Design No.	Galvanized Mild Steel S-Hook Wire Diameter (Inches)	S-hook yield point (+10%/-20%) (Pounds)
5 - 14	1/2	3300

11. LOCK WIRE SHALL BE STAINLESS STEEL, 1/8" SOFT TEMPER, WOUND TO PREVENT TURNING OF THE TURNBUCKLE BODY. FINISHED SPAN SHALL HAVE AT LEAST 2" OF SPACE FOR TURNBUCKLE ADJUSTMENT. TURNBUCKLE SHALL NOT BE OVERTIGHTENED. USE 8-INCH HAND TOOLS, MAXIMUM.

12. IF SIGNAL ORIENTATION IS NOT PERPENDICULAR TO SPAN AND TETHER WIRE, THEN USE AN ANCHOR EXTENSION. CLAMP ASSEMBLY MUST BE ATTACHED TO THE FLAT SIDE OF THE EXTENDER BAR.

13. INSTALL SAFETY TIE AT EACH TURNBUCKLE. THIS WIRE SHALL BE 1"X19", 1/8" STAINLESS STEEL. TIE SHOULD BE SLACK, BUT NOT SO SLACK AS TO CONTACT POLE. USE 3 CLIPS PER END AT 3-1/4" SPACING.

14. TETHER WIRE SHALL BE 7-STRAND ASTM A475 HS OR EHS GRADE 1/4" ON ALL SPANS, INSTALL TETHER HORIZONTALLY. MAINTAIN PREFERRED CLEARANCE OF 17' OVER ROADWAY.

15. SPAN WIRE CLAMP AS PER CITY OF COLUMBUS STANDARD CONSTRUCTION DRAWING 4170 REQUIRED FOR TETHER WIRE ATTACHMENT OR APPROVED EQUAL RATED AT 3000 LBS. OR HIGHER. ALTERNATE ATTACHMENT METHOD SHALL NOT BE PERMITTED.

16. SAFETY TIE ANCHOR HEIGHT ABOVE TETHER IS ADJUSTED IN THE FIELD BEFORE S-HOOK IS INSTALLED. DIMENSION X (SAFETY TIE HEIGHT) SHALL BE ADJUSTED SO THAT THE MINIMUM VERTICAL CLEARANCE OF THE SAGGING TETHER WIRE ABOVE THE PAVEMENT WITHOUT THE S-HOOK INSTALLED IS AT LEAST 14'. MINIMUM DISTANCE BETWEEN THE SAFETY TIE CLAMP AND TETHER CLAMP SHALL BE 1.5' AND CONTAIN ENOUGH SLACK FOR HEAD TO SWAY IN HIGH WINDS. SAFETY TIE ANCHOR MAY BE ANY GALVANIZED OR STAINLESS STEEL POLE CLAMP ASSEMBLY RATED AT 3000 POUNDS OR HIGHER.

17. ON SPANS WITH BULLRINGS, A TIE SHALL BE PROVIDED BETWEEN MESSENGER AND TETHER BULLRINGS IF A 14' CLEARANCE CANNOT BE MAINTAINED AFTER S-HOOK OPENING. THIS VERTICAL TIE SHALL BE 1"X19", 1/16" STAINLESS STEEL. TIE SHALL BE SLIGHTLY SLACK, TIED BACK USING CAST WIRE ROPE CLIPS AS SHOWN. WIRE ROPE CLIPS SHALL NOT BE OVER-TIGHTENED.

18. FOR BACKPLATES SEE CITY OF COLUMBUS STANDARD CONSTRUCTION DRAWING 4205.

OVERHEAD SIGNAL ATTACHMENTS - SPAN WIRE

CITY OF COLUMBUS, OHIO
DEPARTMENT OF PUBLIC SERVICE
DIVISION OF DESIGN AND CONSTRUCTION

STD DWG
4202

Hassan Zahran

5/01/2014

CITY ENGINEER

SHT 7 OF 7

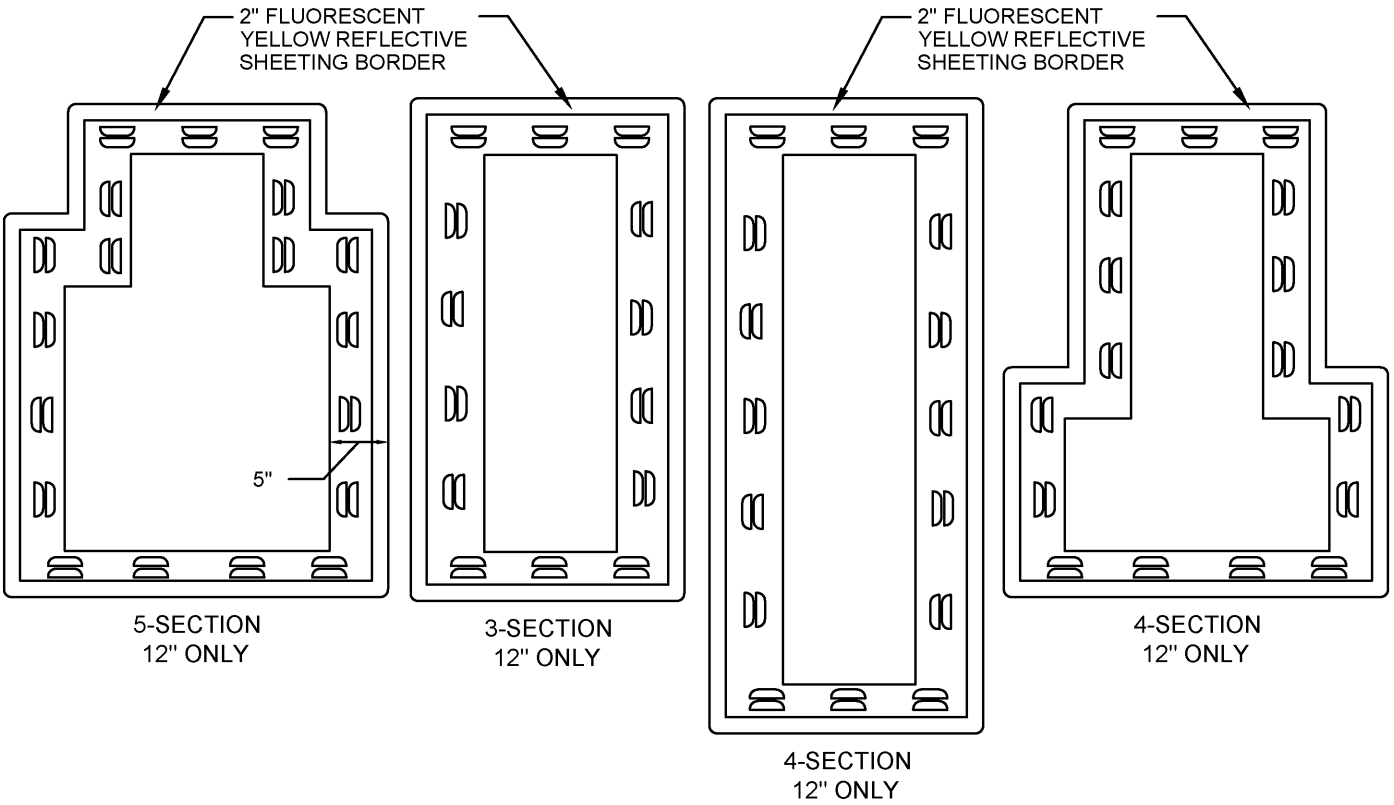

BACKPLATE LOUVER CONFIGURATION
(SEE NOTE BELOW)

NOTE:

ALL BACKPLATES SHALL HAVE LOUVERS AND 2" FLUORESCENT YELLOW REFLECTIVE BORDER. BORDER SHALL NOT BE APPLIED OVER LOUVERS. LOUVERS SHOULD BE ORIENTED TO SCOOP AIR FROM THE FRONT SIDE AND ORIENTED WITH THE OPENINGS FACING ALTERNATE DIRECTIONS BY GROUPS, AS SHOWN. LOUVER OPEN AREA SHALL BE AT LEAST 8 PERCENT OF THE TOTAL BACKPLATE AREA. 5-SECTION BACKPLATES SHALL HAVE NOTCHED TOP CORNERS, AS SHOWN.

TRAFFIC SIGNAL BACKPLATE

CITY OF COLUMBUS, OHIO
DEPARTMENT OF PUBLIC SERVICE
DIVISION OF DESIGN AND CONSTRUCTION

STD DWG
4205

Hassan Zahran

5/01/2014

CITY ENGINEER

SHT 1 OF 1

FOR PUSHBUTTON LOCATED AT THE SIDE OF A LANDING AREA

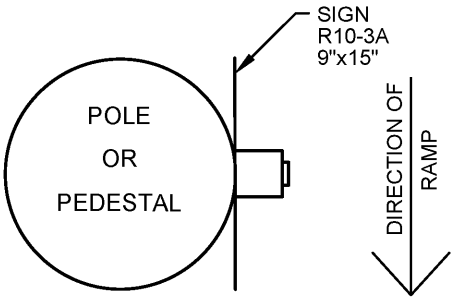

R10-3A-9 (L)
9"x15"

FOR PUSHBUTTON LOCATED AT THE SIDE OF A LANDING AREA

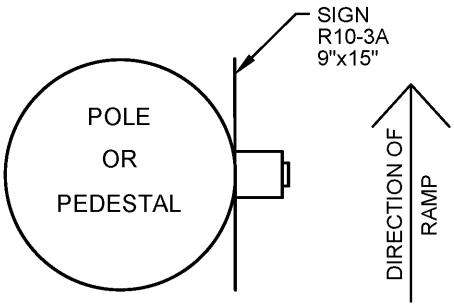

R10-3A-9 (R)
9"x15"

FOR PUSHBUTTON LOCATED AT THE BACK OF A LANDING AREA

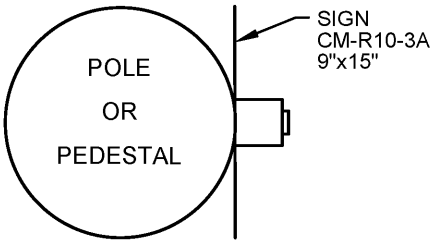

CM-R10-3A-9
9"x15"
* Actual Street Name To Be Used

NOTE:

THE BOTTOM OF THE PUSHBUTTON SIGN SHALL BE MOUNTED JUST ABOVE THE TOP OF THE PUSHBUTTON.

PUSHBUTTON & SIGN INSTALLATION DETAIL

CITY OF COLUMBUS, OHIO
DEPARTMENT OF PUBLIC SERVICE
DIVISION OF DESIGN AND CONSTRUCTION

STD DWG
4230

5/01/2014

CITY ENGINEER

SHT 1 OF 1

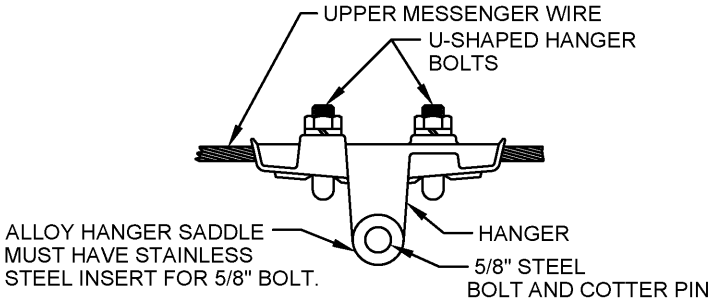

SIGN WIRE CLAMP

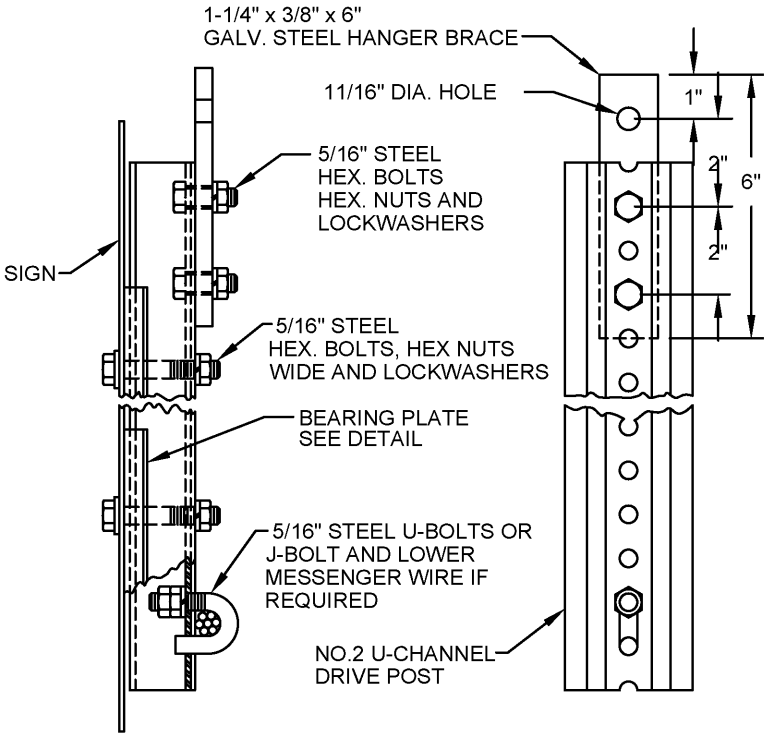

SINGLE SIGN HANGER ASSEMBLY

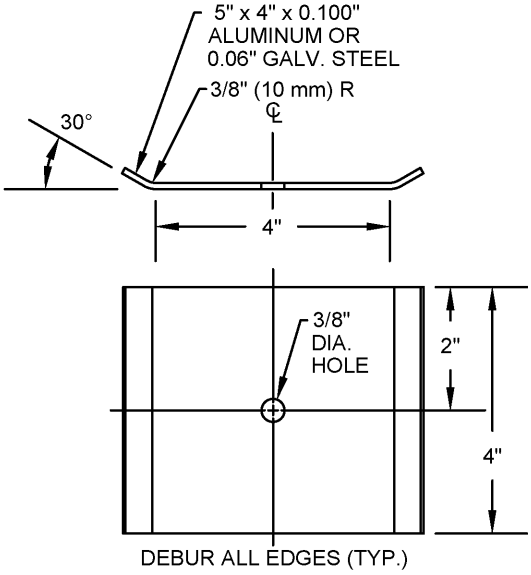

BEARING PLATE

TYPE 1

SIGN HANGER ASSEMBLY SPAN WIRE

CITY OF COLUMBUS, OHIO
DEPARTMENT OF PUBLIC SERVICE
DIVISION OF DESIGN AND CONSTRUCTION

STD DWG
4250

5/01/2014

CITY ENGINEER

SHT 1 OF 2

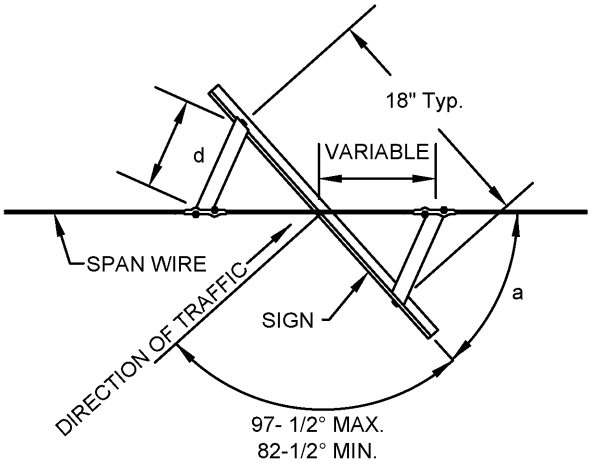

a	d (in)
0°	0
15°	2.4
30°	4.7
45°	6.9
60°	9

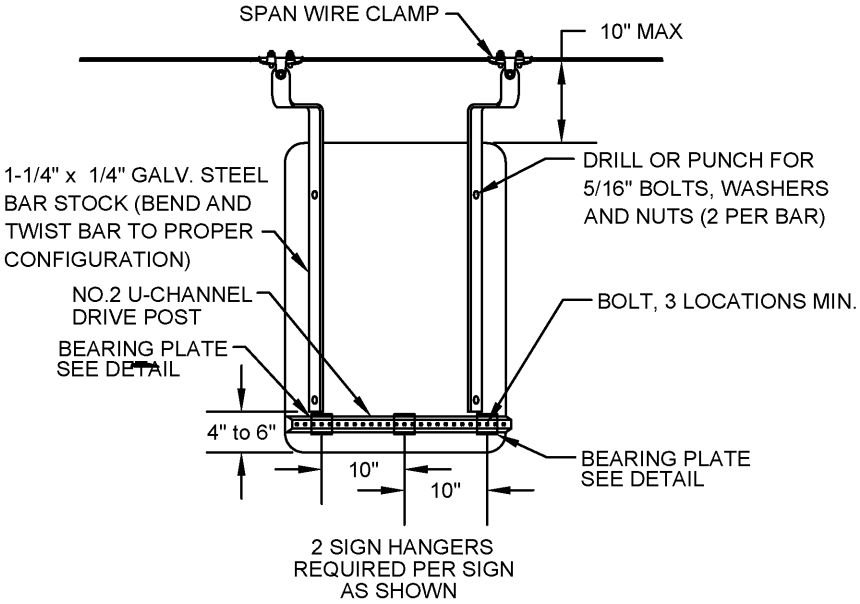

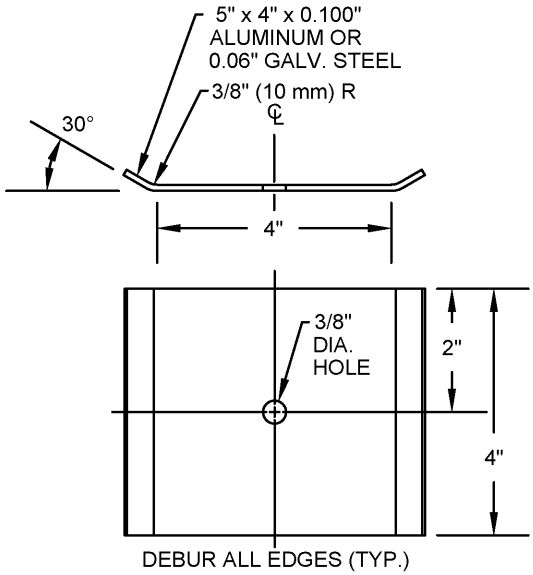

BEARING PLATE

TYPE 2

SIGN HANGER ASSEMBLY SPAN WIRE

CITY OF COLUMBUS, OHIO
DEPARTMENT OF PUBLIC SERVICE
DIVISION OF DESIGN AND CONSTRUCTION

STD DWG
4250

5/01/2014

CITY ENGINEER

SHT 2 OF 2

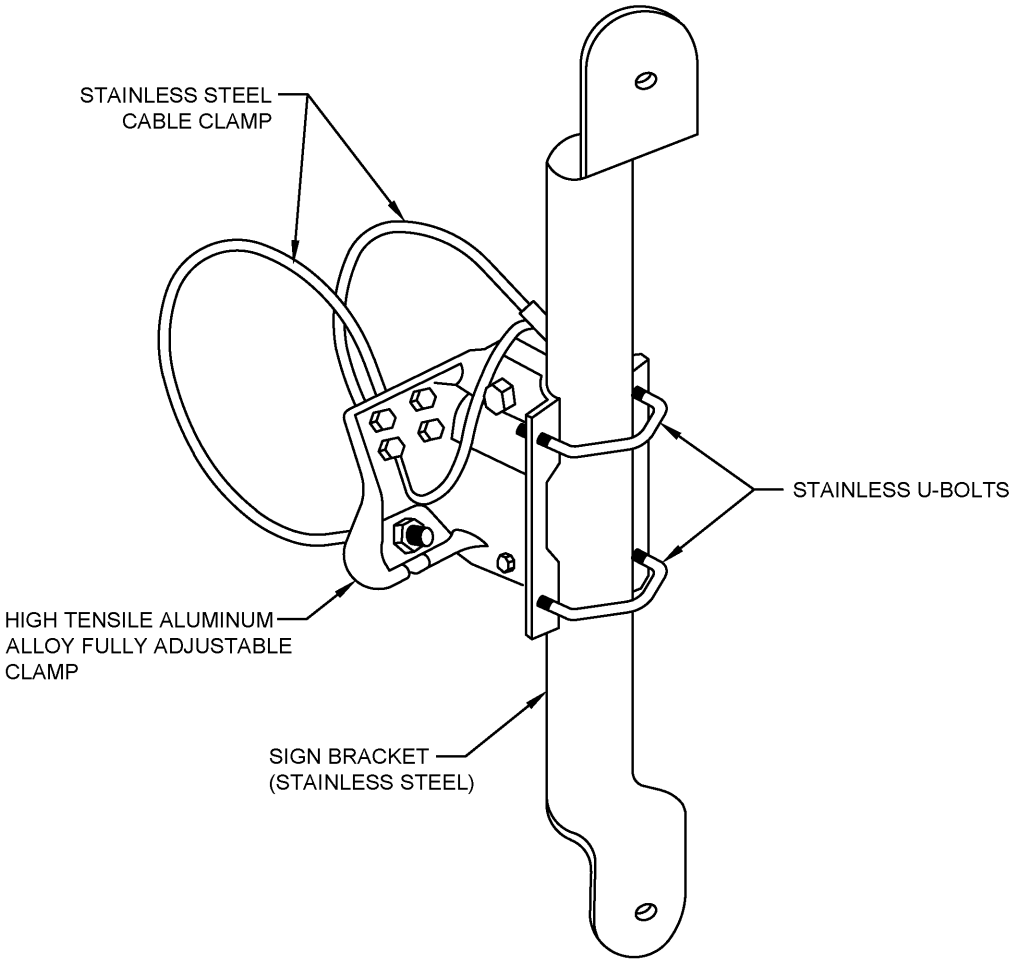

NOTES:

ALL MOUNTING HARDWARE SHALL BE COATED TO MATCH SUPPORT STRUCTURE.

STAINLESS STEEL CABLE SHALL BE NEATLY COILED AFTER FINAL TENSIONING AND SECURELY PLACED WITHOUT CUTTING.

SIGN HANGER ASSEMBLY MAST ARM RIGID MOUNTED

CITY OF COLUMBUS, OHIO
DEPARTMENT OF PUBLIC SERVICE
DIVISION OF DESIGN AND CONSTRUCTION

STD DWG
4251

5/01/2014

CITY ENGINEER

SHT 1 OF 1

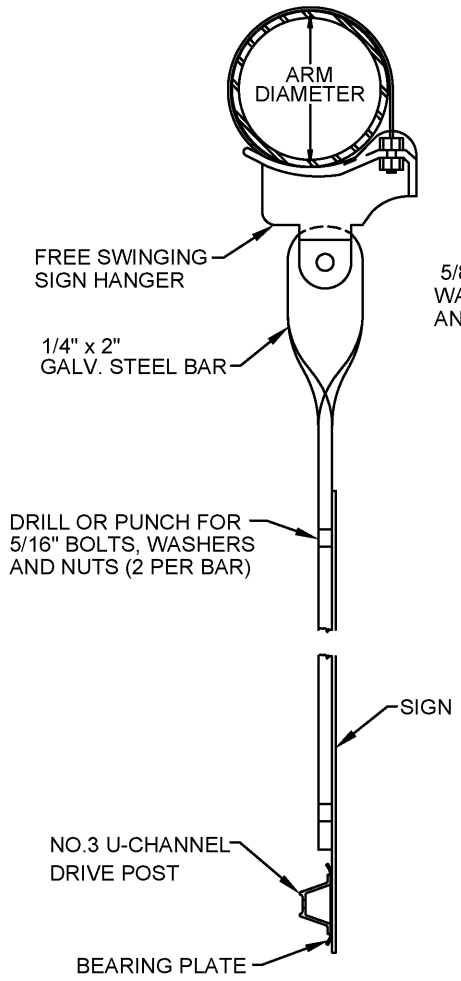

SIDE VIEW

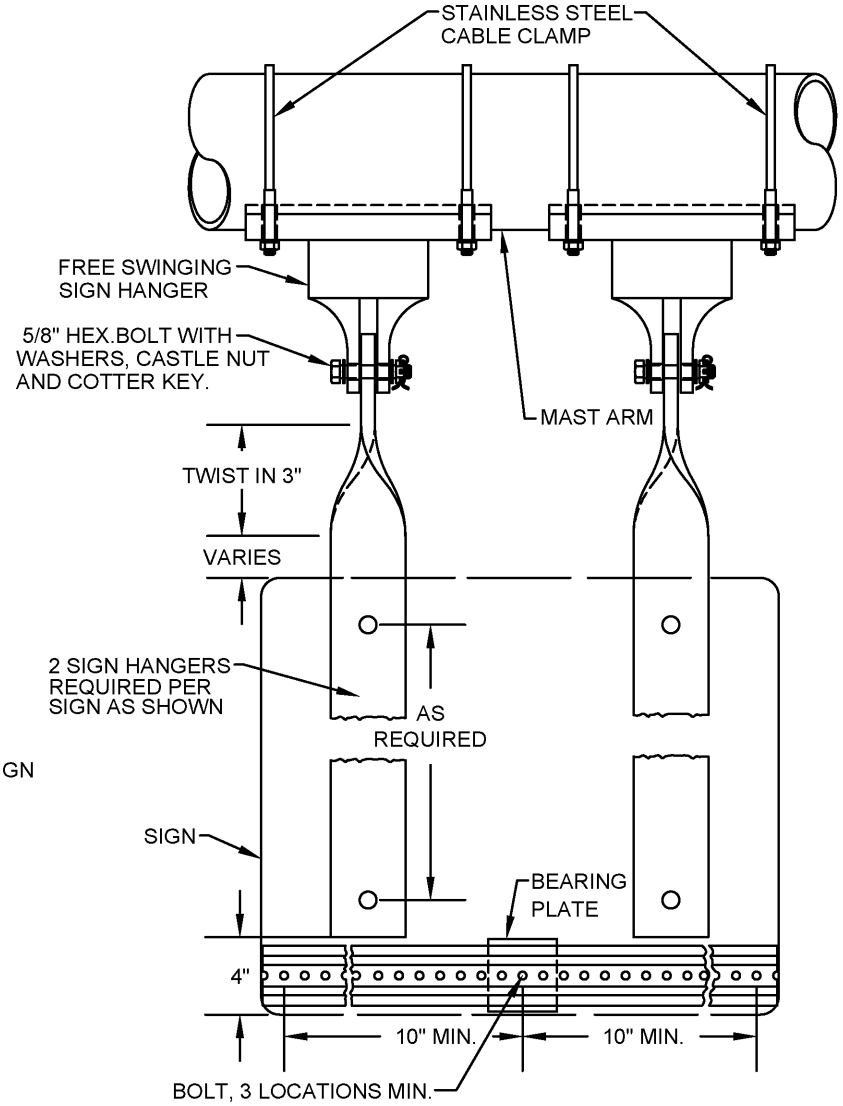

REAR VIEW

NOTES:

ALL MOUNTING HARDWARE SHALL BE COATED TO MATCH SUPPORT STRUCTURE.

STAINLESS STEEL CABLE CLAMP SHALL NOT BE PAINTED.

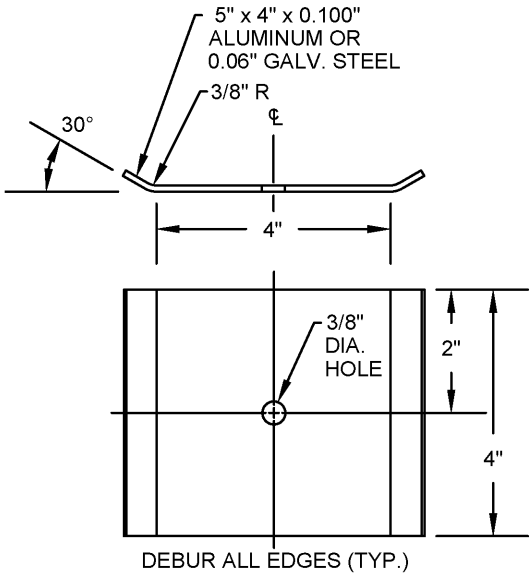

BEARING PLATE

SIGN HANGER ASSEMBLY MAST ARM FREE SWINGING

CITY OF COLUMBUS, OHIO
DEPARTMENT OF PUBLIC SERVICE
DIVISION OF DESIGN AND CONSTRUCTION

STD DWG
4252

5/01/2014

CITY ENGINEER

SHT 1 OF 1

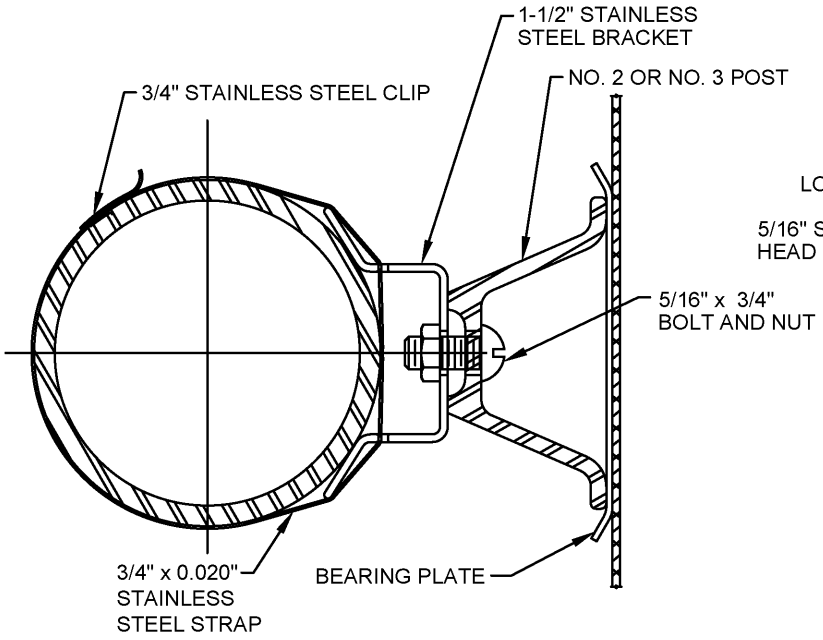

U-CHANNEL ATTACHMENT TO MAST ARM

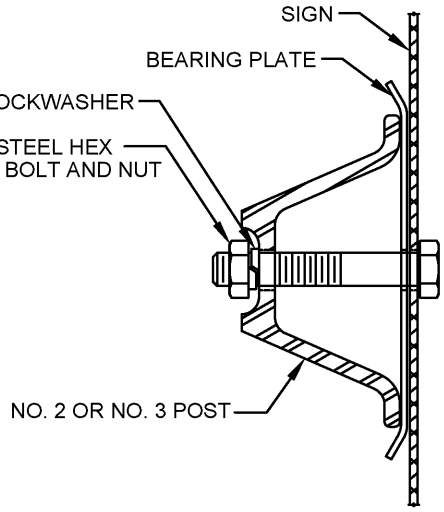

SIGN TO U-CHANNEL ATTACHMENT

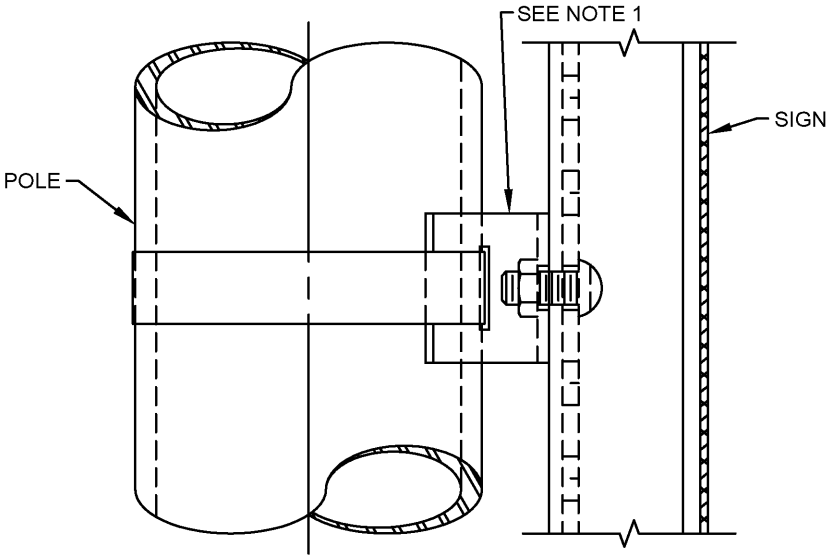

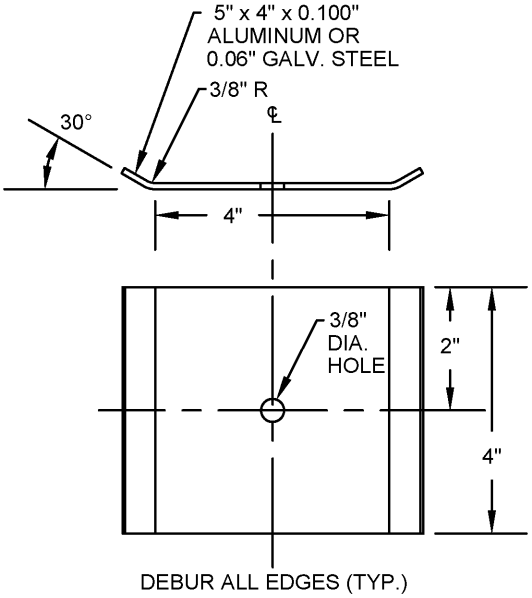

BEARING PLATE

NOTES:

1. USE A MINIMUM OF 2 BRACKETS (LOCATED 6" FROM TOP AND BOTTOM OF SIGN) PER INSTALLATION WITH MAXIMUM SPACING OF 3'.
2. ALL MOUNTING HARDWARE SHALL BE COATED TO MATCH SUPPORT STRUCTURE.
3. STAINLESS STEEL BANDING SHALL NOT BE PAINTED.

SIGN SUPPORT ASSEMBLY POLE MOUNTED

CITY OF COLUMBUS, OHIO
DEPARTMENT OF PUBLIC SERVICE
DIVISION OF DESIGN AND CONSTRUCTION

STD DWG
4253

Hassan Zahran

5/01/2014

CITY ENGINEER

SHT 1 OF 1

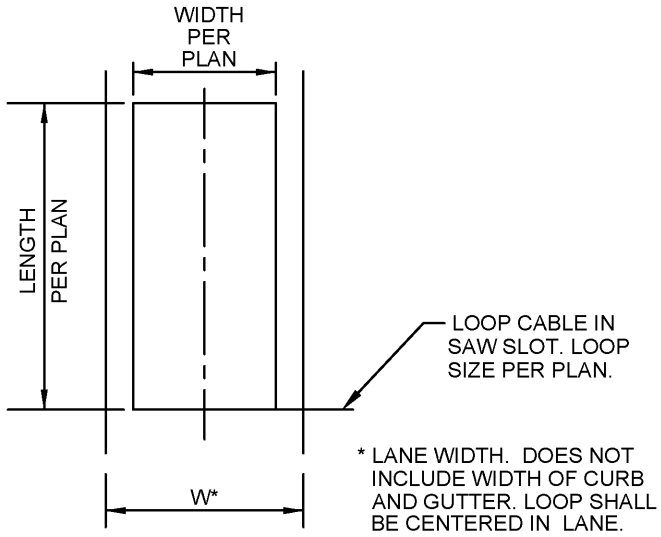

VEHICULAR DETECTOR

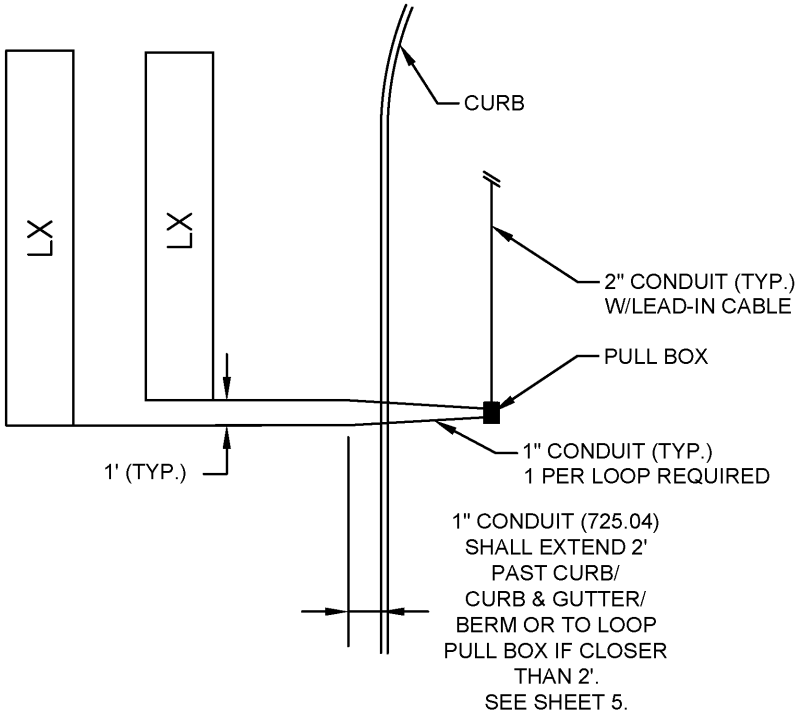

MULTIPLE LOOP DETECTOR INSTALLATION DETAIL

NOTES:

ONLY ONE SET OF LOOP WIRES SHALL BE RUN IN A SAW SLOT.

ALL ADJACENT SAW SLOTS SHALL HAVE A MINIMUM DISTANCE OF 1 FT BETWEEN THEM. NO SAW SLOT SHALL BE LOCATED WITHIN 1 FT OF A LONGITUDINAL OR TRANSVERSE JOINT IN P.C.C. PAVEMENTS IF THE SLOT IS PARALLEL TO THE JOINT.

DETECTOR LOOPS SHALL EACH BE ON A SEPARATE DETECTOR UNIT CHANNEL.

ALL CONDUIT FROM THE LOOP DETECTOR TO THE PULL BOX SHALL BE 725.04.

VEHICULAR DETECTOR STANDARDS

CITY OF COLUMBUS, OHIO
DEPARTMENT OF PUBLIC SERVICE
DIVISION OF DESIGN AND CONSTRUCTION

STD DWG
4300

5/01/2014

CITY ENGINEER

SHT 1 OF 7

RECTANGULAR DETECTOR LOOP DETAILS

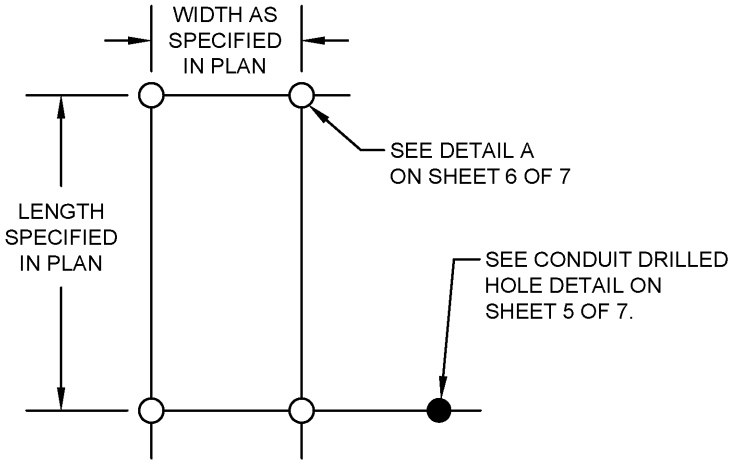

SAW CUT LAYOUT

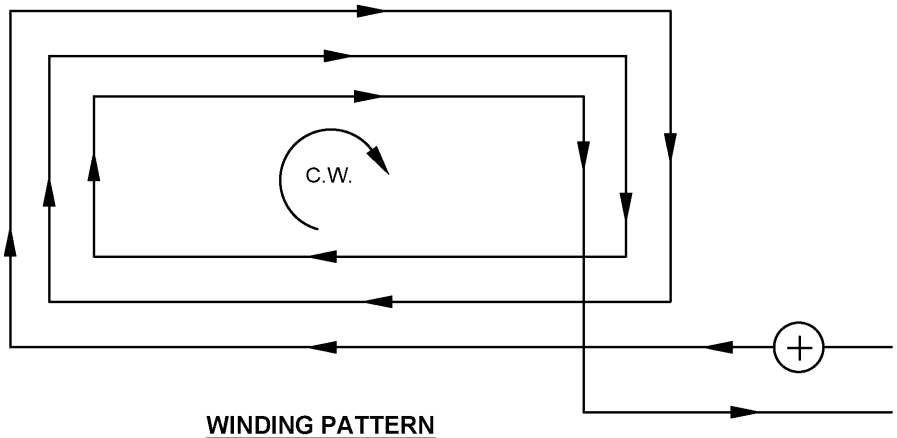

WINDING PATTERN

SEE TABLE FOR NUMBER OF TURNS

RECTANGULAR LOOP CONSTRUCTION	
LOOP TYPE	NUMBER OF TURNS
PRESENCE DETECTION LOOPS	3
ADVANCED DETECTION LOOPS (6'x6')	4

VEHICULAR DETECTOR STANDARDS

CITY OF COLUMBUS, OHIO
DEPARTMENT OF PUBLIC SERVICE
DIVISION OF DESIGN AND CONSTRUCTION

STD DWG 4300

5/01/2014

CITY ENGINEER

SHT 2 OF 7

QUADRUPOLE LOOP DETAILS

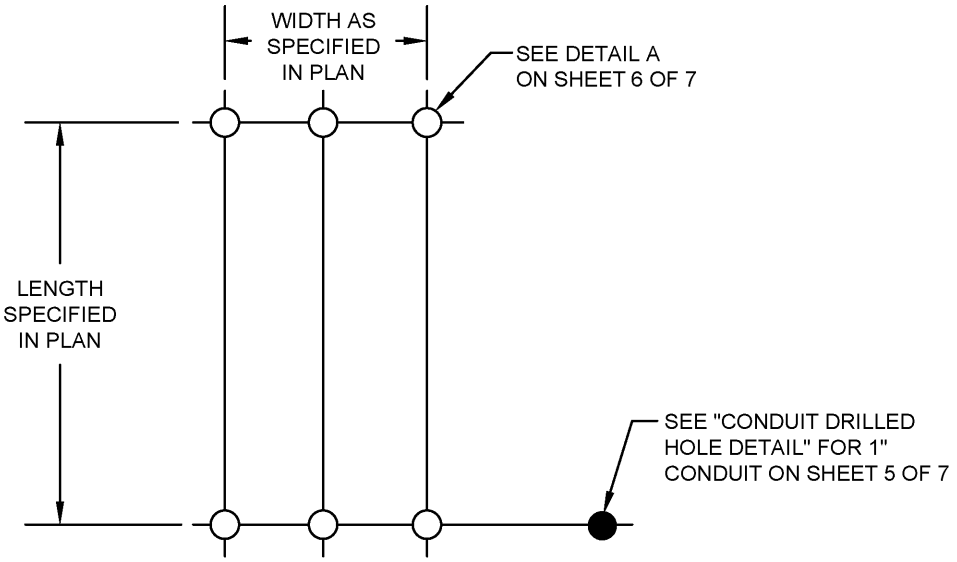

SAW CUT LAYOUT

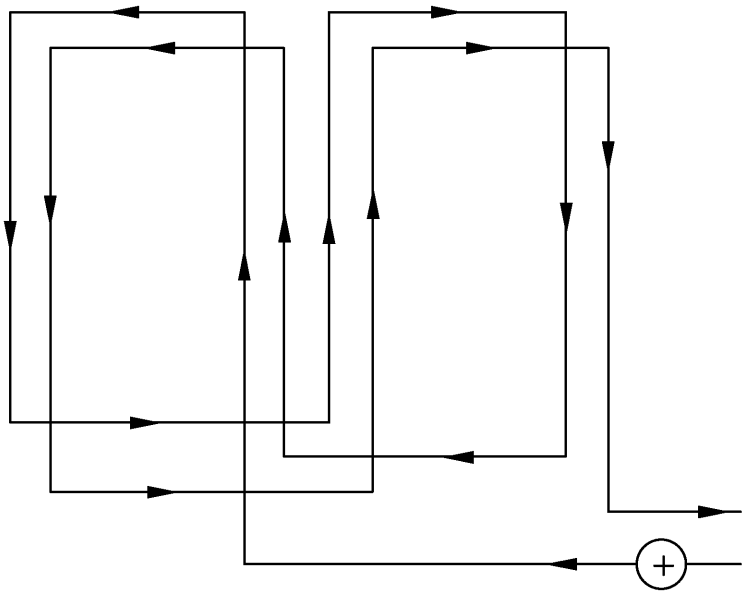

WINDING PATTERN

NUMBER OF TURNS IS 2-4-2

VEHICULAR DETECTOR STANDARDS

CITY OF COLUMBUS, OHIO DEPARTMENT OF PUBLIC SERVICE DIVISION OF DESIGN AND CONSTRUCTION	STD DWG 4300
Hassan Zahran	5/01/2014
CITY ENGINEER	SHT 3 OF 7

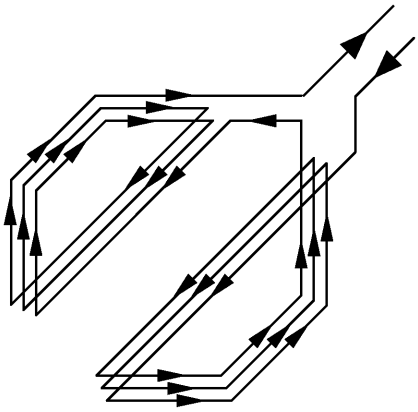

WINDING DETAIL

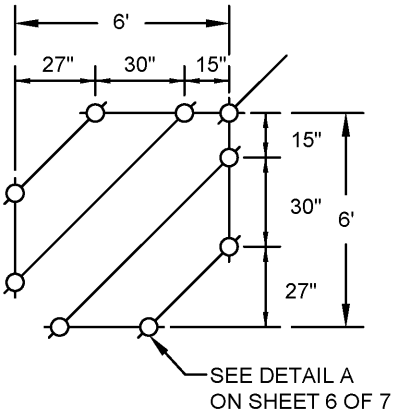

SAWCUT DETAIL

BICYCLE ONLY
LOOP DETECTOR
INSTALLATION DETAIL

BICYCLE LOOP CONSTRUCTION	
LOOP TYPE	NUMBER OF TURNS
PRESENCE DETECTION LOOPS	3-3-3-3

VEHICULAR DETECTOR STANDARDS

CITY OF COLUMBUS, OHIO
DEPARTMENT OF PUBLIC SERVICE
DIVISION OF DESIGN AND CONSTRUCTION

STD DWG
4300

5/01/2014

CITY ENGINEER

SHT 4 OF 7

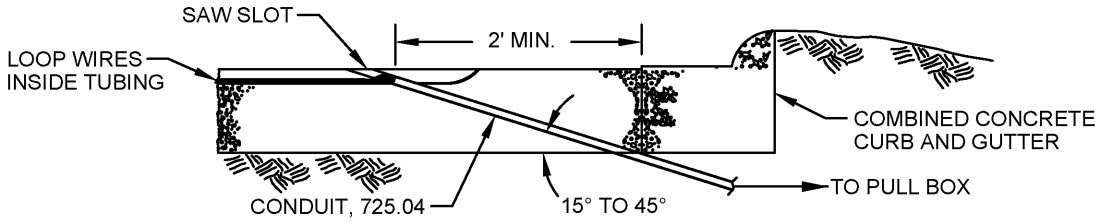

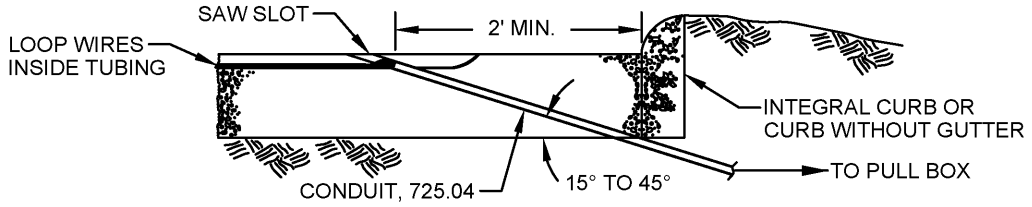

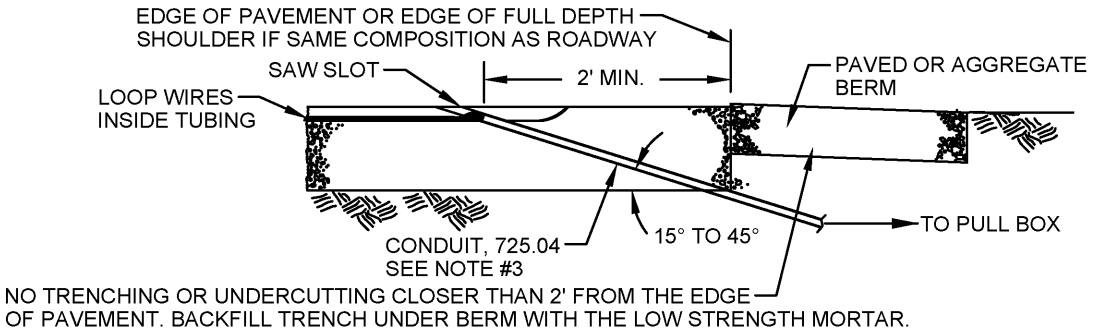

NOTES:

THE DRILLED HOLE SHALL BE LOCATED AS SHOWN ABOVE AND WITHIN THE FULL DEPTH PAVEMENT. IT SHALL NOT BE DRILLED OR CUT THROUGH THE PAVED BERM, CURB OR CURB AND GUTTER SECTION.

IN AREAS OF POOR PAVEMENT CONDITION, THE SAW SLOT DEPTH SHALL BE INCREASED TO INSURE ADEQUATE WIRE EMBEDMENT. ALL FIELD ADJUSTMENTS SHALL BE SUBJECT TO THE APPROVAL OF THE ENGINEER.

IF AN EXISTING PAVED BERM IS 4.5" THICK OR MORE, THE LOOP WIRE MAY BE INSTALLED IN A SAW SLOT CUT ACROSS THE BERM. WHEN PAVED BERM ARE LESS THAN 4.5" THICK, THE CONDUIT RACEWAY SHALL BE INSTALLED AS SHOWN.

TYPICAL DRILLED HOLE LOCATIONS FOR 1" CONDUIT

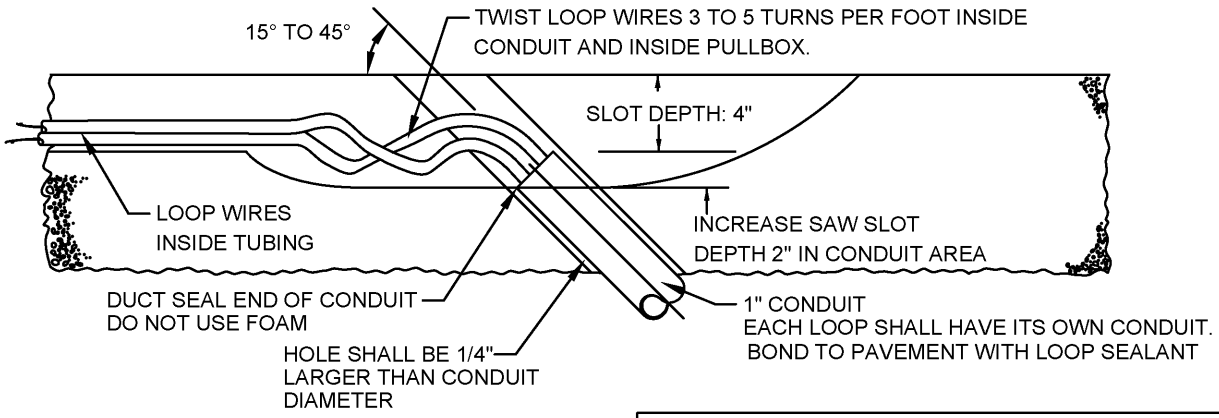

CONDUIT DRILLED HOLE DETAIL FOR 1" CONDUIT

VEHICULAR DETECTOR STANDARDS

CITY OF COLUMBUS, OHIO
DEPARTMENT OF PUBLIC SERVICE
DIVISION OF DESIGN AND CONSTRUCTION

STD DWG
4300

Hassan Zahran

5/01/2014

CITY ENGINEER

SHT 5 OF 7

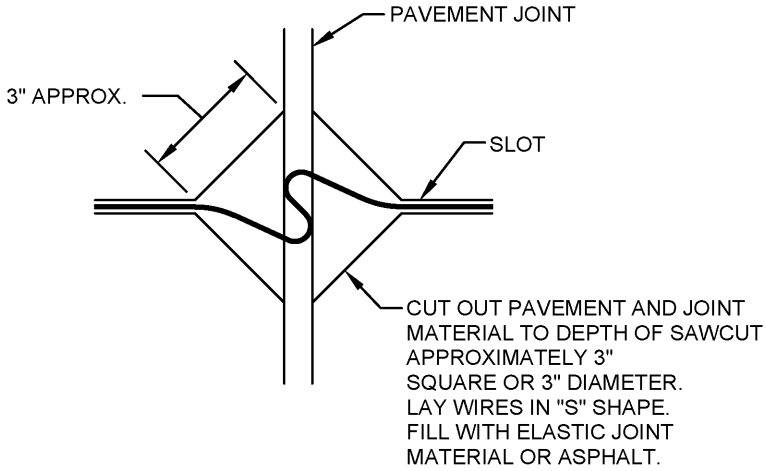

JOINT CROSSING DETAIL
IN PORTLAND CEMENT CONCRETE
PAVEMENTS

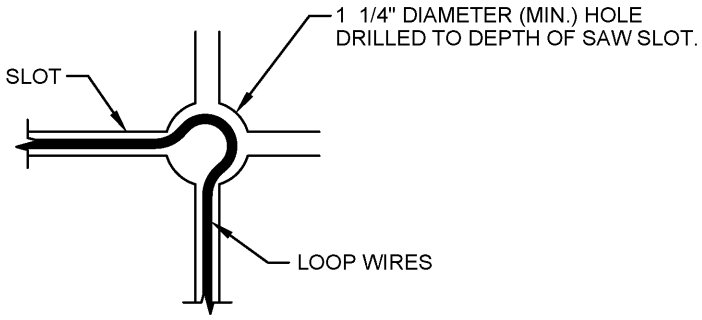

DETAIL A

VEHICULAR DETECTOR STANDARDS

CITY OF COLUMBUS, OHIO
DEPARTMENT OF PUBLIC SERVICE
DIVISION OF DESIGN AND CONSTRUCTION

STD DWG
4300

5/01/2014

CITY ENGINEER

SHT 6 OF 7

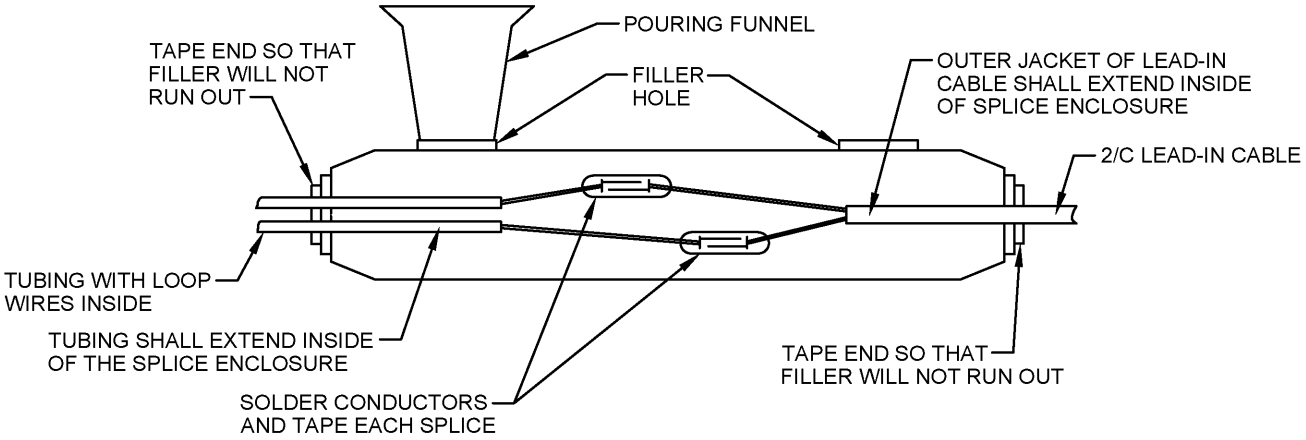

SPLICE ENCLOSURE DETAIL

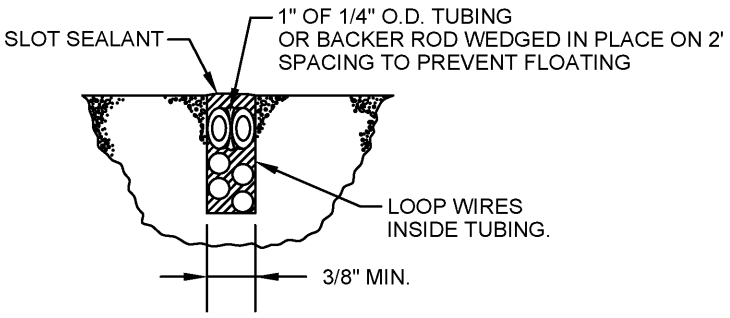

SLOT DETAIL

NOTES:

LOOP DETECTOR WIRE TO LEAD-IN CABLE SPLICES WITHIN THE ENCAPSULATED SPLICE ENCLOSURE SHALL BE SOLDERED.

IF A PULLBOX IS NOT SPECIFIED IN THE PLANS, THE WATERPROOF SPLICE ENCLOSURE SHALL BE LOCATED IN THE FIRST ENTERED POLE OR PEDESTAL, EXCEPT IF THE CONTROLLER CABINET IS MOUNTED ON THAT POLE OR PEDESTAL, IN WHICH CASE THE LOOP WIRES SHALL BE ROUTED DIRECTLY INTO THE CABINET.

THE ENCLOSURE SHALL NOT CONTAIN VISIBLE AIR BUBBLES (VOIDS) GREATER THAN 1/4 IN (16 MM)

LOOP SLOT DEPTH SHALL BE 4 IN.

LOOP DETECTOR WIRE IN TUBING SHALL BE AS SPECIFIED IN CMSC TABLE 732.19-1

LOOP DETECTOR SEALANT SHALL BE PER THE CITY OF COLUMBUS PRE-QUALIFIED PRODUCT LIST.

SAW SLOTS SHALL BE THOROUGHLY CLEANED AND DRIED PRIOR TO INSTALLATION OF SEALANT.

VEHICULAR DETECTOR STANDARDS

CITY OF COLUMBUS, OHIO
DEPARTMENT OF PUBLIC SERVICE
DIVISION OF DESIGN AND CONSTRUCTION

STD DWG
4300

5/01/2014

CITY ENGINEER

SHT 7 OF 7

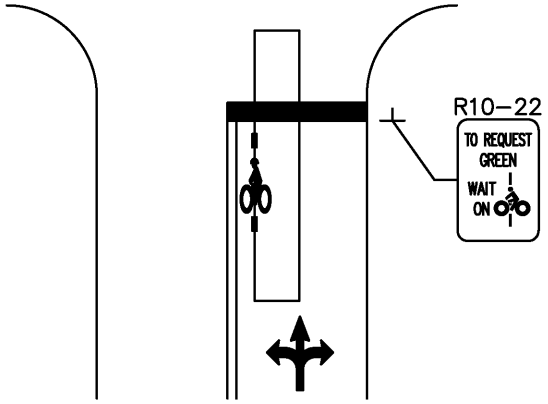

TWO-WAY CONDITION A

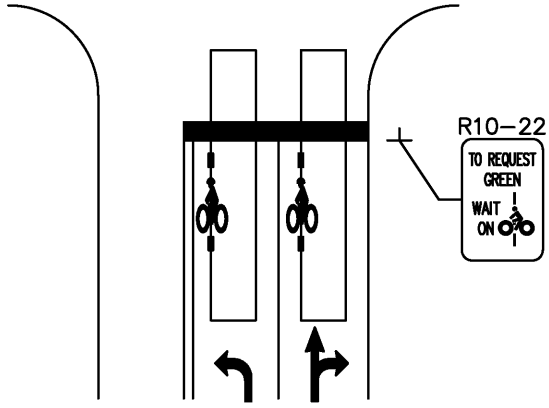

TWO-WAY CONDITION B

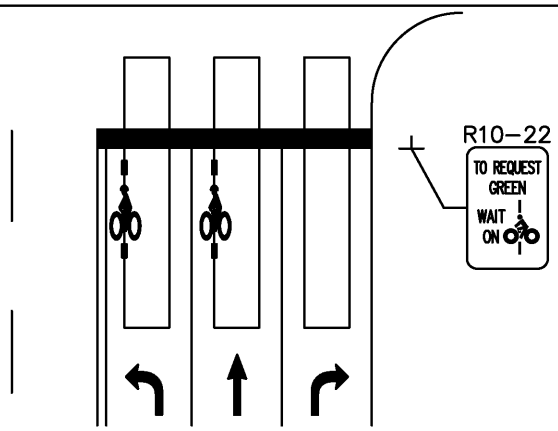

TWO-WAY CONDITION C

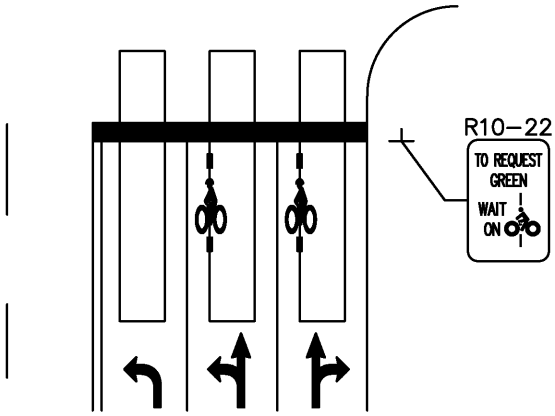

TWO-WAY CONDITION D

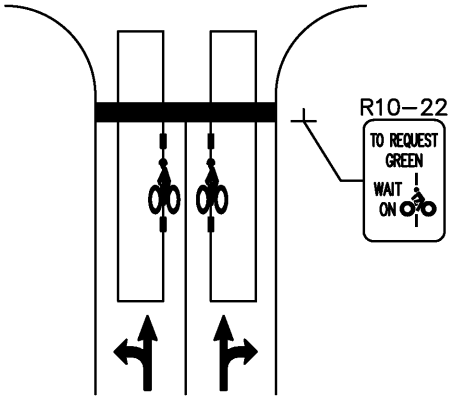

ONE-WAY CONDITION A

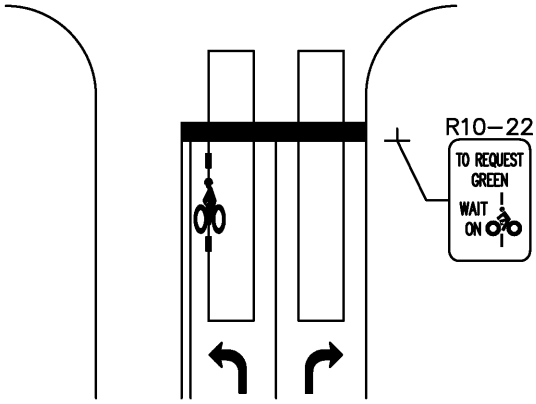

TWO-WAY CONDITION E

NOTES:

BICYCLE DETECTOR MARKINGS SHALL:
- BE USED WHEN A BICYCLE NEEDS TO ACTUATE A TRAFFIC SIGNAL PHASE IN ORDER TO PROCEED THROUGH AN INTERSECTION.
- NOT BE USED FOR RIGHT TURN ONLY LANES, WHEN RIGHT TURN ON RED IS PERMITTED.
- NOT BE USED FOR SECOND VEHICLE DETECTION.
- BE ACCOMPANIED BY A R10-22 BICYCLE DETECTOR SIGN.

PLACEMENT GUIDELINES:
- LOCATE NEAR THE STOP LINE.
- LOCATE TO AVOID CONFLICTS WITH OTHER MARKINGS.
- LOCATE IN THE RIGHT-MOST THROUGH LANE AND RIGHT-MOST LEFT TURN LANE.
- LOCATE ON THE LEFT SIDE OF AN INDUCTION LOOP, EXCEPT FOR THE LEFT LANE OF ONE-WAY STREETS.
- LOCATE ON THE RIGHT SIDE OF AN INDUCTIVE LOOP FOR THE LEFT LANE OF ONE-WAY STREETS.

INDUCTIVE LOOP DETECTOR APPLICATION

BIKE DETECTOR MARKINGS

CITY OF COLUMBUS, OHIO
DEPARTMENT OF PUBLIC SERVICE
DIVISION OF DESIGN AND CONSTRUCTION

Hassan Zahran

CITY ENGINEER

STD DWG
4301

5/01/2014

SHT 1 OF 2

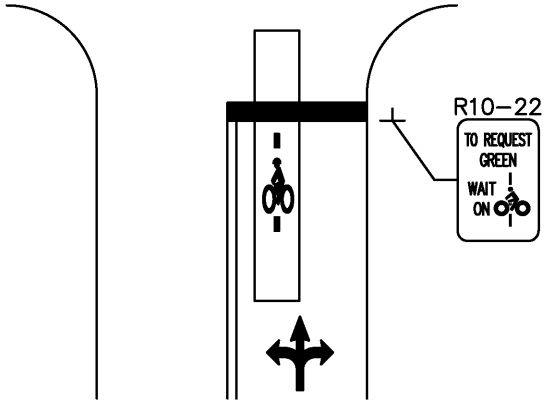

TWO-WAY CONDITION A

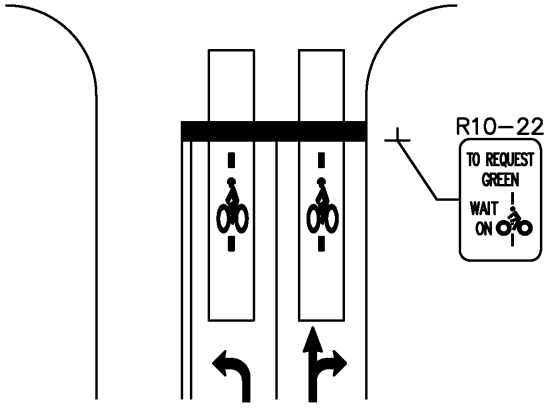

TWO-WAY CONDITION B

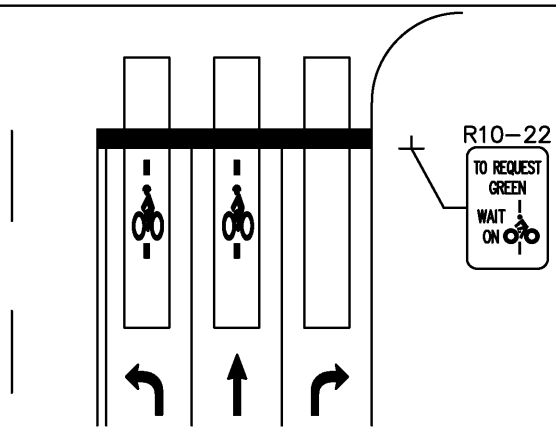

TWO-WAY CONDITION C

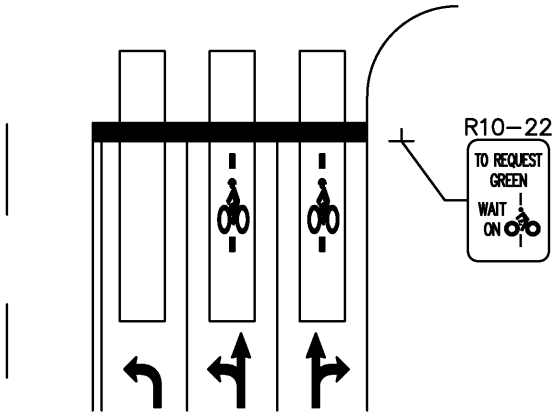

TWO-WAY CONDITION D

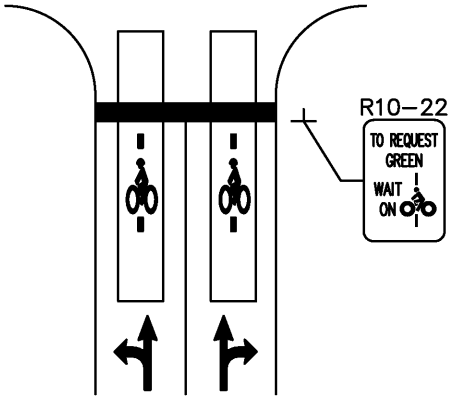

ONE-WAY CONDITION A

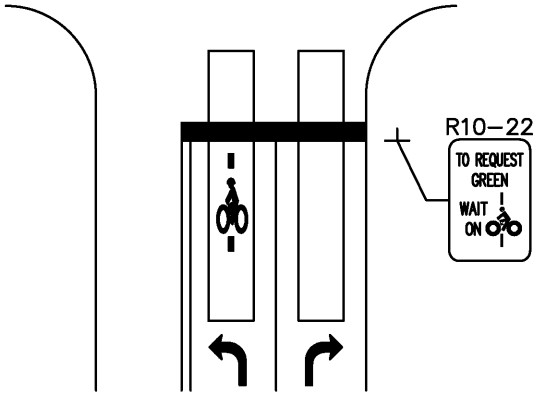

TWO-WAY CONDITION E

NOTES:

BICYCLE DETECTOR MARKINGS SHALL:
- BE USED WHEN A BICYCLE NEEDS TO ACTUATE A TRAFFIC SIGNAL PHASE IN ORDER TO PROCEED THROUGH AN INTERSECTION.
- NOT BE USED FOR RIGHT TURN ONLY LANES, WHEN RIGHT TURN ON RED IS PERMITTED.
- NOT BE USED FOR SECOND VEHICLE DETECTION.
- BE ACCOMPANIED BY A R10-22 BICYCLE DETECTOR SIGN.

PLACEMENT GUIDELINES:
- LOCATE NEAR THE STOP LINE.
- LOCATE TO AVOID CONFLICTS WITH OTHER MARKINGS.
- LOCATE IN THE RIGHT-MOST THROUGH LANE AND RIGHT-MOST LEFT TURN LANE.
- LOCATE IN THE HORIZONTAL CENTER OF A VIDEO DETECTION ZONE.

VIDEO DETECTION APPLICATION

BIKE DETECTOR MARKINGS

CITY OF COLUMBUS, OHIO
DEPARTMENT OF PUBLIC SERVICE
DIVISION OF DESIGN AND CONSTRUCTION

STD DWG
4301

5/01/2014

CITY ENGINEER

SHT 2 OF 2

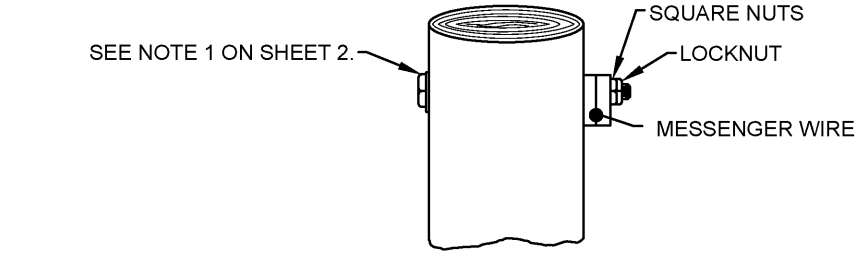

WOOD POLE SIDE VIEW

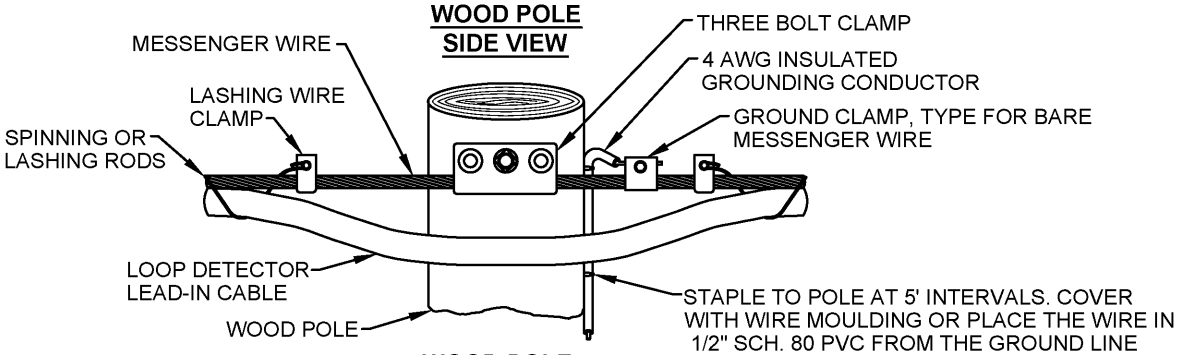

WOOD POLE FRONT VIEW

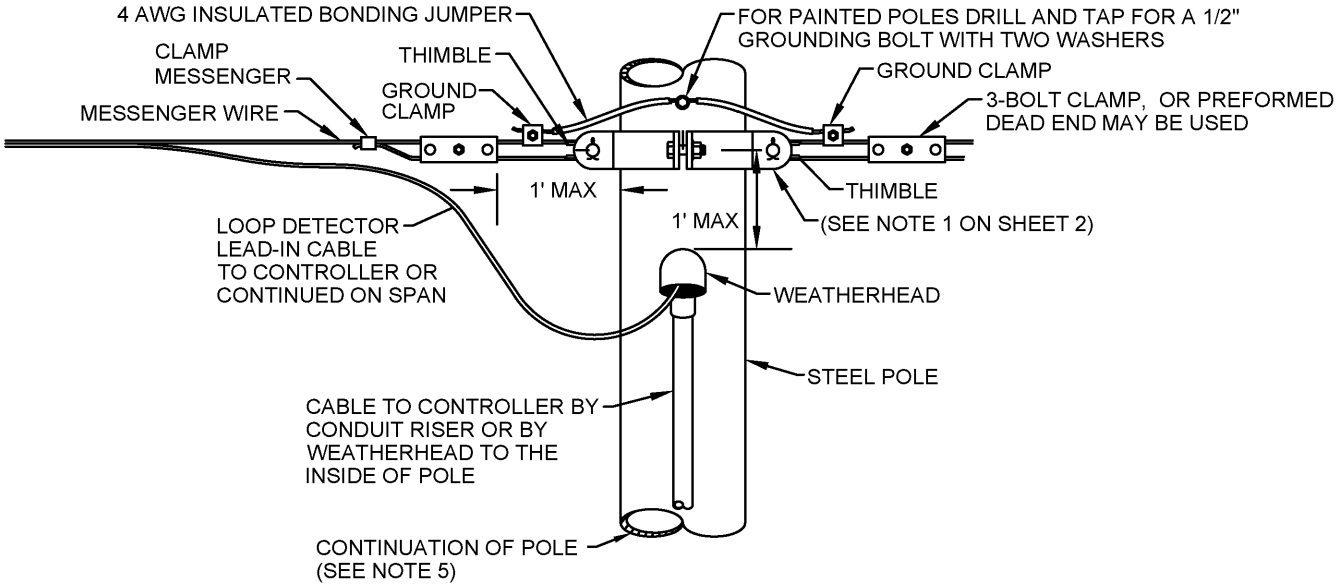

LOOP DETECTOR LEAD-IN ATTACHMENT DETAILS

MESSENGER WIRE DETAILS I

CITY OF COLUMBUS, OHIO DEPARTMENT OF PUBLIC SERVICE DIVISION OF DESIGN AND CONSTRUCTION	STD DWG 4330
Hassan Zahra	5/01/2014
CITY ENGINEER	SHT 1 OF 2

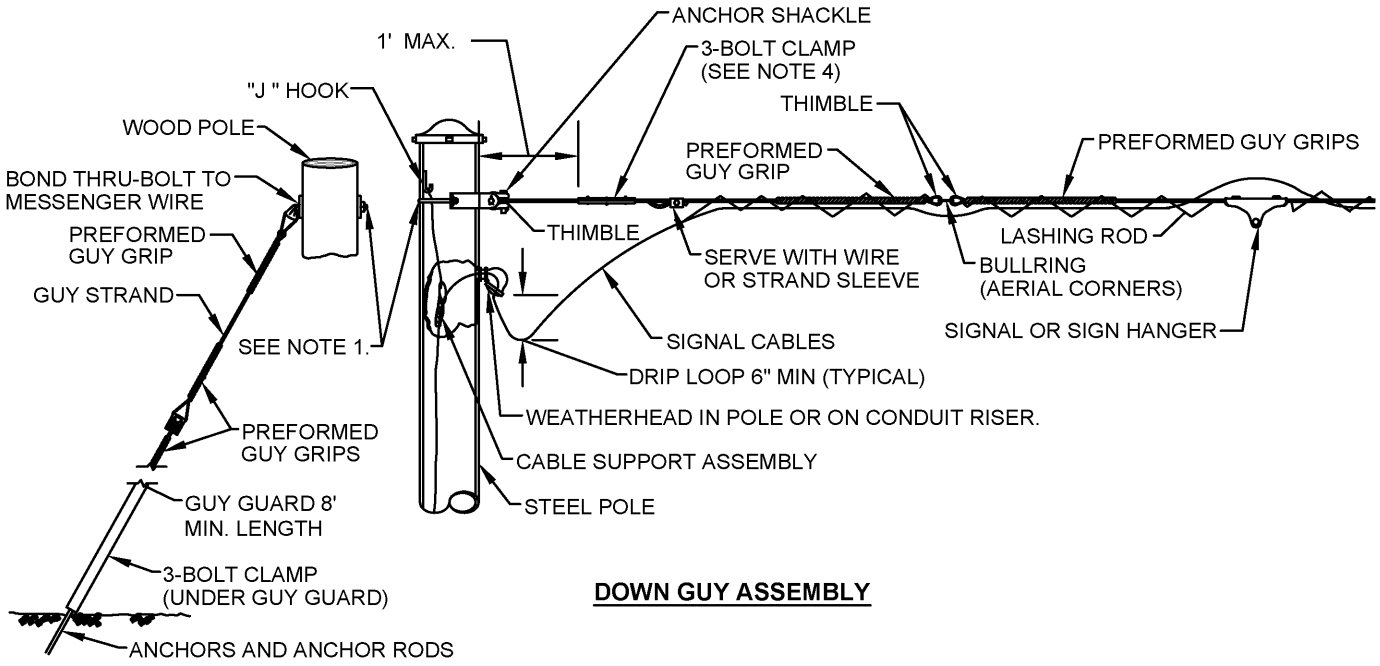

DOWN GUY ASSEMBLY

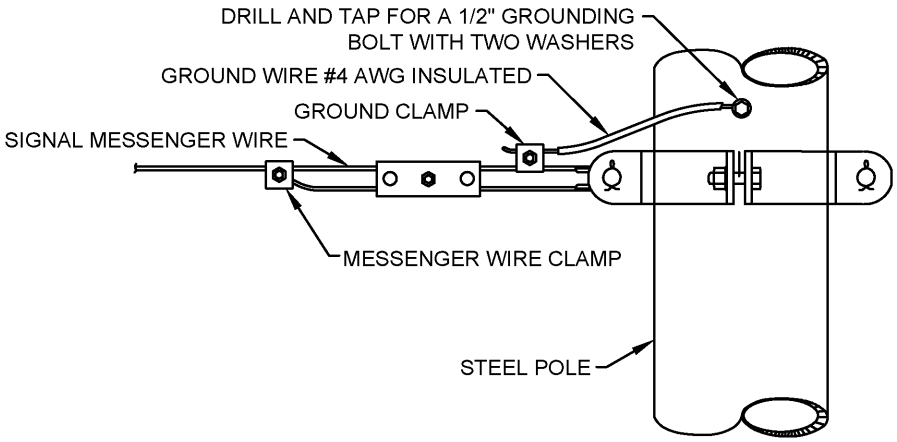

TRAFFIC SIGNAL MESSENGER WIRE GROUNDING DETAIL

NOTES:

1. MESSENGER WIRE POLE ATTACHMENT SHALL BE BY A POLE CLAMP ON STEEL POLES AND BE A 5/8" THRU-BOLT (OR THIMBLE-EYE BOLT) WITH WASHERS ON WOOD POLES.

2. THE LOOP DETECTOR LEAD-IN CABLE SHALL HAVE A SAG BETWEEN 3% AND 5% OR MATCH EXISTING UTILITY LINES.

3. THE POWER SERVICE MESSENGER WIRE SHALL BE GROUNDED AT THE FIRST AND LAST POLES IN A CABLE RUN AND AT INTERVALS NOT TO EXCEED 1200 FEET. WHEN ATTACHED TO WOOD POLES, THE MESSENGER WIRE SHALL BE GROUNDED BY BONDING TO AN EXISTING GROUND ROD. THE MESSENGER WIRE SHALL BE BONDED TO GROUNDED STEEL POLES BY USE OF A 1/2" BOLT, DRILLED AND TAPPED INTO THE POLE.

4. THE MINIMUM 3-BOLT CLAMP SHALL BE 6 INCH LONG WITH 1/2" DIAMETER BOLTS. PREFORMED GUY GRIPS SHALL NOT BE USED TO ATTACH THE MESSENGER WIRE TO THE SIGNAL POLES. THEIR USE IS LIMITED TO BULLRING ATTACHMENTS.

5. FOR CONTINUATION OF POLE SEE CITY OF COLUMBUS STANDARD CONSTRUCTION DRAWING 4050.

MESSENGER WIRE DETAILS I

CITY OF COLUMBUS, OHIO DEPARTMENT OF PUBLIC SERVICE DIVISION OF DESIGN AND CONSTRUCTION	STD DWG 4330
Hassan Zahra	5/01/2014
CITY ENGINEER	SHT 2 OF 2

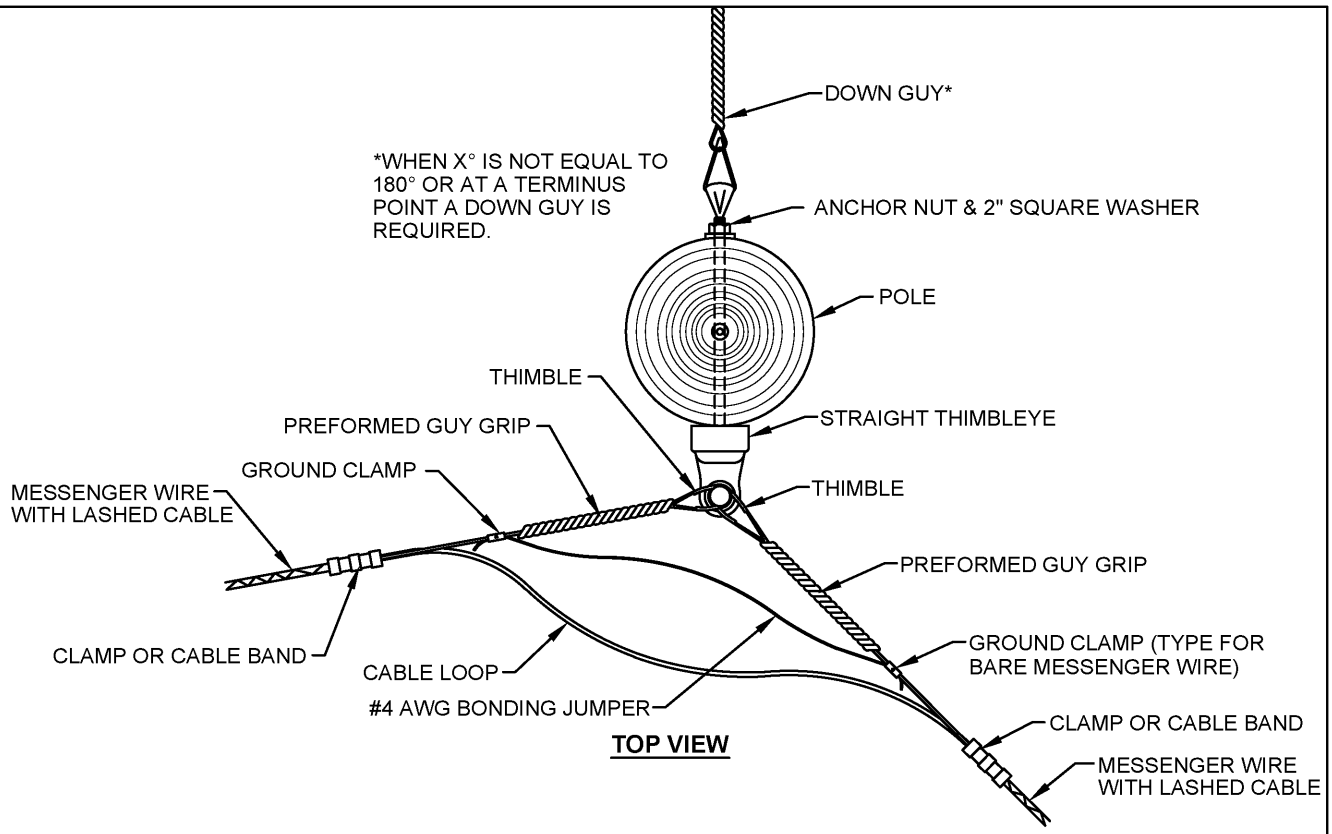

TOP VIEW

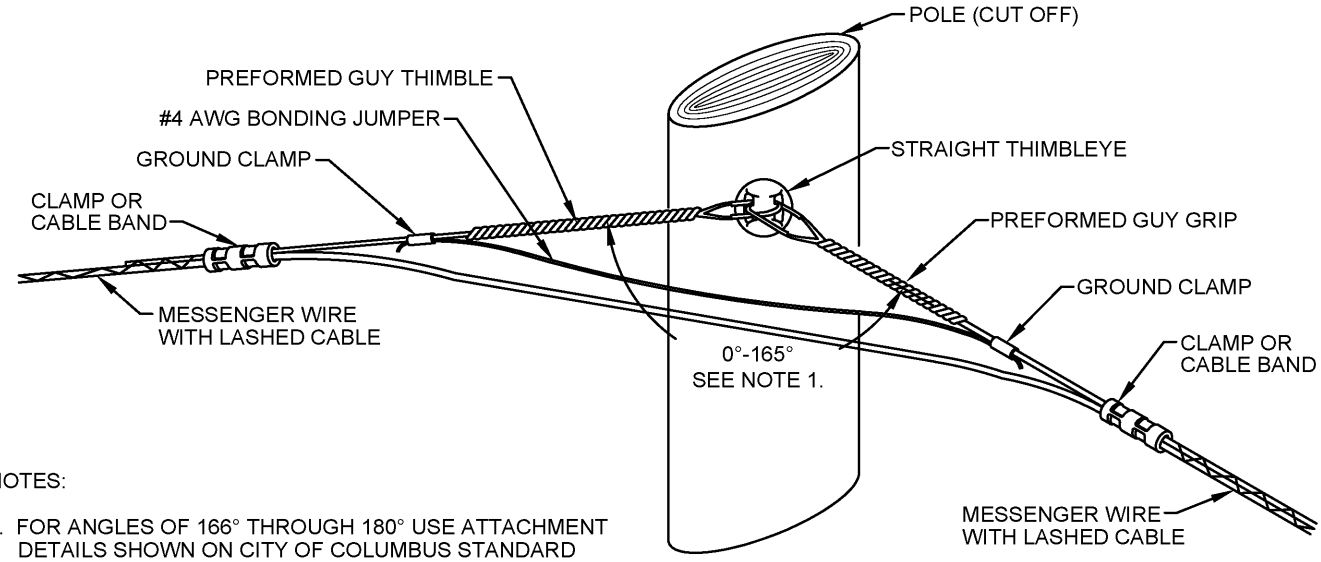

FRONT VIEW

NOTES:

1. FOR ANGLES OF 166° THROUGH 180° USE ATTACHMENT DETAILS SHOWN ON CITY OF COLUMBUS STANDARD CONSTRUCTION DRAWING 4330. MESSENGER WIRE POLE ATTACHMENT SHALL BE BY A POLE CLAMP ON STEEL POLES AND BY A 5/8 INCH THRU-BOLT OR THIMBLEYE BOLT WITH 2" SQUARE WASHERS ON WOOD POLES.

2. POWER SERVICE MESSENGER WIRE SHALL BE ELECTRICALLY GROUNDED AT THE FIRST AND LAST POLES IN A CABLE RUN AND AT INTERVALS NOT TO EXCEED 1200 FEET.

3. WHEN ATTACHED TO WOOD POLES, THE MESSENGER WIRE SHALL BE GROUNDED BY BONDING TO EXISTING SIGNAL GROUND WIRE OR CONNECTION TO A GROUND ROD. THE MESSENGER WIRE SHALL BE BONDED TO GROUNDED STEEL POLES BY USE OF A 1/2" BOLT, DRILLED AND TAPPED INTO THE POLE.

4. LOOP DETECTOR LEAD-IN CABLE SHALL HAVE A SAG TO MATCH THE EXISTING UTILITY LINES OR WHEN NO EXISTING LINES A SAG OF 3% TO 5%.

5. GROUNDING OF POLES SHALL BE AS SHOWN ON CITY OF COLUMBUS STANDARD CONSTRUCTION DRAWING 4330.

MESSENGER WIRE DETAILS II

CITY OF COLUMBUS, OHIO DEPARTMENT OF PUBLIC SERVICE DIVISION OF DESIGN AND CONSTRUCTION	STD DWG 4331
Hassan Zahra	5/01/2014
CITY ENGINEER	SHT 1 OF 1

MAINLINE PROTECTED ONLY LEFT TURN PHASE, LEADING LEFT TURN ONLY CIRCUIT

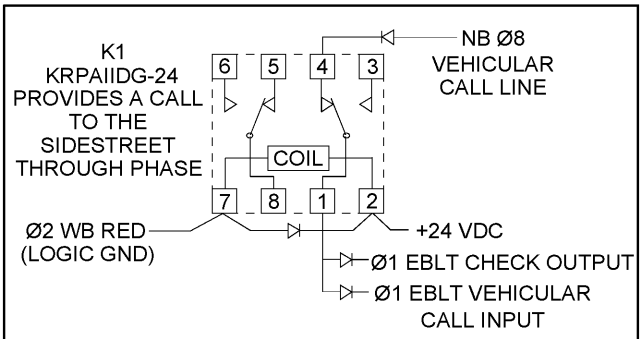

1. RELAY SHOWN IN A DE-ENERGIZED STATE.
2. MOUNT RELAY BASE ON AN ALUMINUM PANEL THAT IS TO BE MOUNTED ON THE LEFT CABINET SIDE WALL.
3. PLACE A PERMANENT LABEL ON THE PLATE READING "EBLT Ø CUTOUT RELAY"

EBLT PROTECTED ONLY PHASE

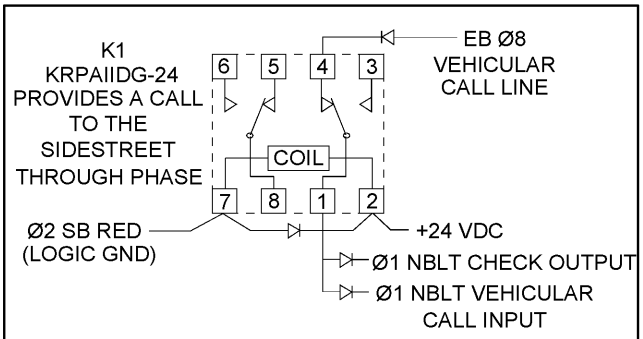

1. RELAY SHOWN IN A DE-ENERGIZED STATE.
2. MOUNT RELAY BASE ON AN ALUMINUM PANEL THAT IS TO BE MOUNTED ON THE LEFT CABINET SIDE WALL.
3. PLACE A PERMANENT LABEL ON THE PLATE READING "NBLT Ø CUTOUT RELAY"

NBLT PROTECTED ONLY PHASE

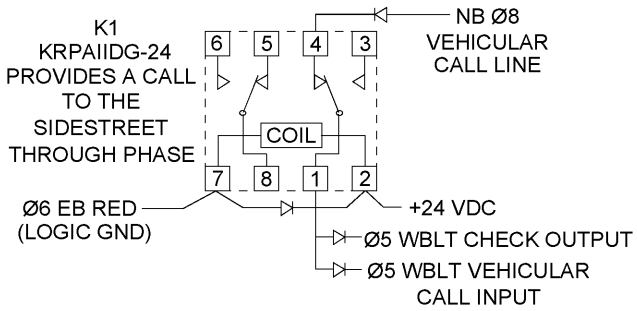

1. RELAY SHOWN IN A DE-ENERGIZED STATE.
2. MOUNT RELAY BASE ON AN ALUMINUM PANEL THAT IS TO BE MOUNTED ON THE LEFT CABINET SIDE WALL.
3. PLACE A PERMANENT LABEL ON THE PLATE READING "WBLT Ø CUTOUT RELAY"

WBLT PROTECTED ONLY PHASE

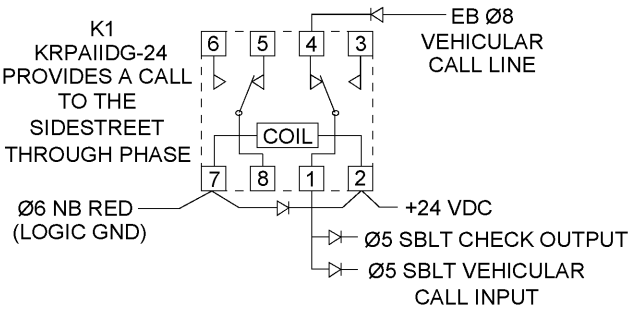

1. RELAY SHOWN IN A DE-ENERGIZED STATE.
2. MOUNT RELAY BASE ON AN ALUMINUM PANEL THAT IS TO BE MOUNTED ON THE LEFT CABINET SIDE WALL.
3. PLACE A PERMANENT LABEL ON THE PLATE READING "SBLT Ø CUTOUT RELAY"

SBLT PROTECTED ONLY PHASE

LEFT TURN TRAP PREVENTION CUT-OUT RELAY

CITY OF COLUMBUS, OHIO
DEPARTMENT OF PUBLIC SERVICE
DIVISION OF DESIGN AND CONSTRUCTION

STD DWG
4332

5/01/2014

CITY ENGINEER

SHT 1 OF 1

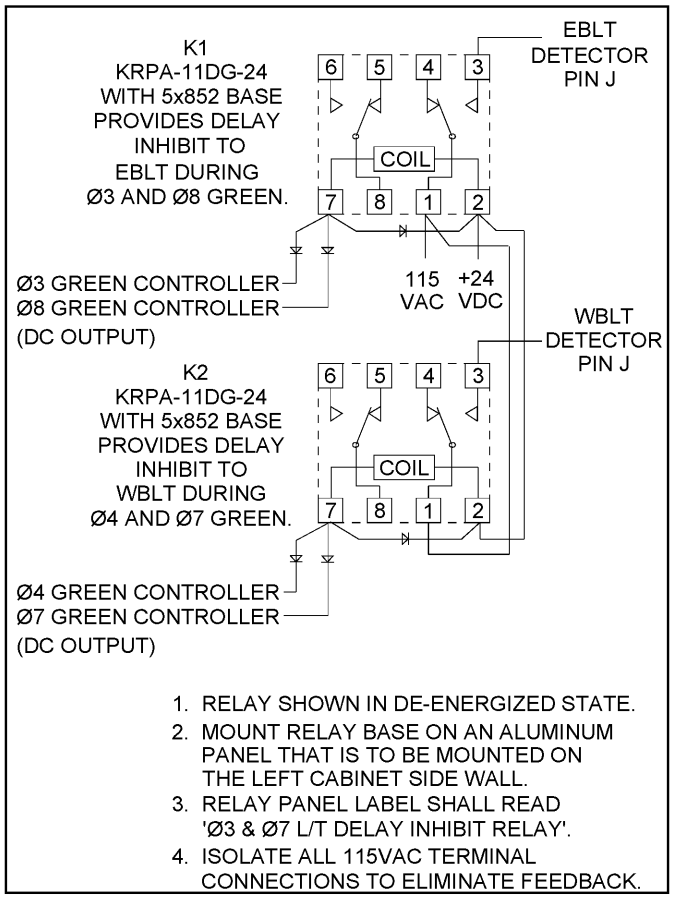

1. RELAY SHOWN IN DE-ENERGIZED STATE.
2. MOUNT RELAY BASE ON AN ALUMINUM PANEL THAT IS TO BE MOUNTED ON THE LEFT CABINET SIDE WALL.
3. RELAY PANEL LABEL SHALL READ 'Ø3 & Ø7 L/T DELAY INHIBIT RELAY'.
4. ISOLATE ALL 115VAC TERMINAL CONNECTIONS TO ELIMINATE FEEDBACK.

Ø3/Ø7 LEFT TURN INHIBIT DELAY RELAY
USE FOR E/W SIDE STREETS

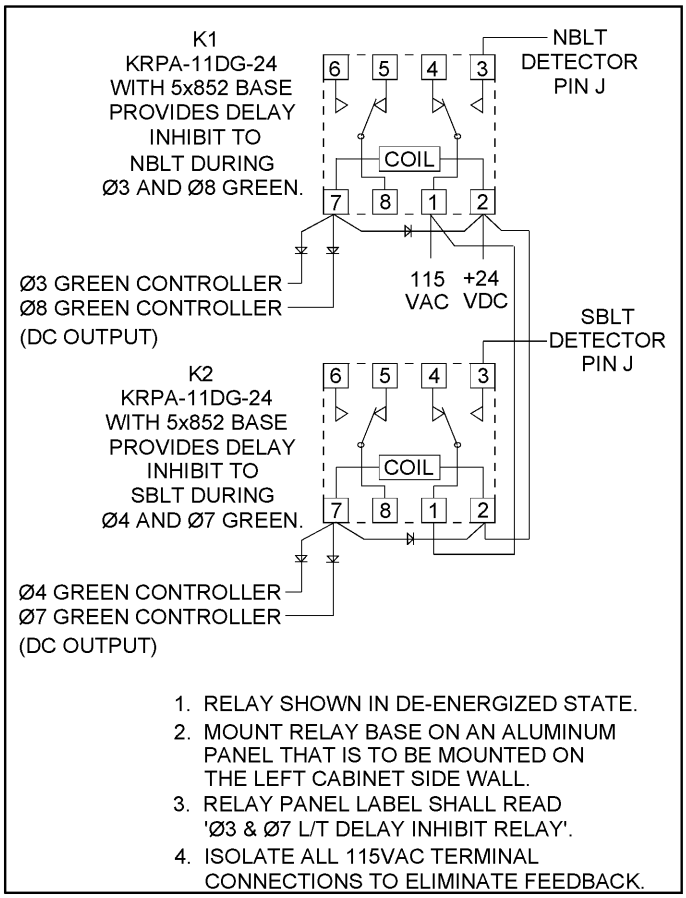

1. RELAY SHOWN IN DE-ENERGIZED STATE.
2. MOUNT RELAY BASE ON AN ALUMINUM PANEL THAT IS TO BE MOUNTED ON THE LEFT CABINET SIDE WALL.
3. RELAY PANEL LABEL SHALL READ 'Ø3 & Ø7 L/T DELAY INHIBIT RELAY'.
4. ISOLATE ALL 115VAC TERMINAL CONNECTIONS TO ELIMINATE FEEDBACK.

Ø3/Ø7 LEFT TURN INHIBIT DELAY RELAY
USE FOR N/S SIDE STREETS

DELAY OVERRIDE RELAY LOGIC FOR SHELF MOUNTED DETECTOR UNITS

INHIBIT DELAY RELAY

CITY OF COLUMBUS, OHIO
DEPARTMENT OF PUBLIC SERVICE
DIVISION OF DESIGN AND CONSTRUCTION

STD DWG
4333

5/01/2014

CITY ENGINEER

SHT 1 OF 1